Exploratorium Cookbook III

A Construction Manual for Exploratorium Exhibits
Revised Edition

by Ron Hipschman and the Exploratorium staff

Cover photo by Susan Schwartzenberg

Exploratorium Cookbook III

A Construction Manual for Exploratorium Exhibits

by Ron Hipschman

Library of Congress Cataloging-in-Publication Data

Hipschman, Ron.

Exploratorium cookbook III : a construction manual for Exploratorium exhibits / Ron Hipschman and the Exploratorium staff.

2nd rev. ed.
p. : ill.; 29 cm.

1. Science—Experiments. 2. Science—Study and teaching. 3. Science museums. I. Exploratorium (Organization)

Q158.5.H58 1993 507.8'220

ISBN 0-943451-38-8 (pbk. : $95)

Support for the production and publication of this Cookbook has been provided by:

The W. K. Kellogg Foundation
The Andrew W. Mellon Foundation

Any opinions, findings, and conclusions, or recommendations expressed in this publication are those of the author and the Exploratorium, and do not necessarily reflect the views of the granting organizations mentioned above.

CAUTION! The exhibits in this publication were designed with public safety and success in mind. But even the simplest device or the most common materials can be harmful when mishandled or misused.

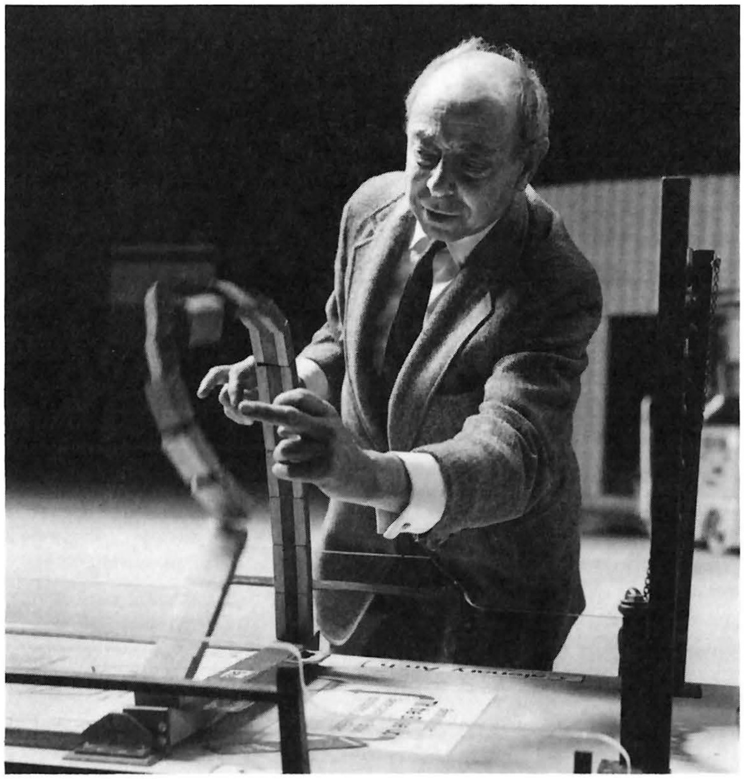

I would like to dedicate this Cookbook to Frank Oppenheimer for his vision and his belief that we can all understand. I hope that this Cookbook will communicate and spread his love of exploring, learning, and teaching.

Ron Hipschman

Acknowledgments

Writing a Cookbook (the Exploratorium type) is an interesting experience. One is not stuck in front of a terminal laboriously pounding out text. Compiling all this information has been a continual marathon of research through time and space involving many people. Without the staff of the Exploratorium here to help with this research, the task would have been impossible. Not only did I need help on exhibits whose builders are still on staff, I also needed help in determining parameters, sizes, parts, and suppliers for exhibits whose builders are happily building elsewhere (some suppliers have gone out of business since the exhibit was built). Thank you staff for making it all happen.

The second Cookbook was produced on my personal computer and printed on my personal printer. Since then, we have been the happy recipient of a wonderful CompuPro computer, donated by the Viasyn Corporation. All text was entered and edited on this machine (thank you Michael Pearce for making me sound literate; thank you Tom Tompkins for your engineering proofreading). Being true creatures of the information age, the text was then sent electronically to our Compugraphic typesetter, generously donated by Compugraphic. This, hopefully, will eliminate any errors that creep in due to re-typing (blame them on me!).

Of course, once the type has been set (thank you Daniel Pike), the laborious job of design and layout remains (thank you Joni Venticinque and Teresa Cunniff for putting it all together). At the layout stage the text, stored in magnetic form to this stage, actually makes it onto paper, where it is combined with wonderful illustrations (thank you Richard Falkard for making me look so good) and schematics (thank you Betty Rose Allen and Debra Coy Smith for keeping the current flowing) and then into the finished boards which are then proofread (thank you Ruth Brown for catching my e's before i's). None of this would have been possible were it not for someone organizing such a diverse group of people (thank you Sally Duensing, or should I call you "Mom," for keeping me in line).

Last and certainly not least, Cookbook III would not have been possible without the generous support of the W.K. Kellogg Foundation and the Andrew W. Mellon Foundation.

Credits

Project Director: Sally Duensing
Art Director: Mark McGowan
Associate Art Director: Larry R. Antilla
Design: Joni Venticinque
Production: Joni Venticinque and Teresa Cunniff
Mechanical and Detail Drawings: Richard Falkard
Exhibit Electrical Schematics: Betty Rose Allen and Debra Coy Smith
Exhibit Drawings: Jad King and Arthur Koch
Editing: Michael Pearce, Ruth Brown, and Pat Murphy
Typesetting: Daniel Pike

Table of Contents for Cookbook III

Introduction

Welcome to the third Exploratorium Cookbook. (If you have either of the first two, welcome back.) This edition adds another 67 recipes to those in Cookbooks I and II, for a total of 201 recipes (1/3 of all of our exhibits!). Here you'll find exhibits from all areas of our museum.

Cookbook III is slightly different from I and II, in that we wanted to stress strategies of teaching with the exhibits as well as their construction. In addition to the "Related Exhibits" at the end of each recipe, we have included one of our "Pathways." Pathways are field-trip guides which aid elementary school teachers in providing some structure to the learning experience at the Exploratorium. Rather than let the kids run wild on the museum floor, Pathways send the kids out on a loosely structured treasure hunt that guides them through a set of related exhibit experiences.

We have also made slight modifications to the categories under which you will find exhibits in the Table of Contents. We have provided a complete listing of the exhibits in all three Cookbooks in a master Table of Contents. Each category in this Cookbook is introduced with a short descriptive page.

When I show other museum people (and potential museum people) around the Exploratorium, I am often asked, "What are your ten most popular exhibits?" The question is difficult to answer, and is probably irrelevant. All of our exhibits are good teaching tools, meant to be used together to show important relationships and provide multiple examples of various phenomena. To single out exhibits as the "most popular" and only build those would serve to trivialize the main mission of a science museum, which is to teach. We start planning our exhibits based on what we want to teach; then we look at how to do it in an interesting and involving way. Sometimes enjoyable and popular exhibits don't provide much in the way of educational nourishment.

In spite of my strong feelings about rating exhibits according to popularity, there is some truth in the idea that if someone likes an exhibit, that exhibit is more likely to be a better teaching tool. As a matter of fact, one of our rules of exhibit building states that if the exhibit doesn't excite the designer/builder, it has no hope of exciting the public, so don't bother with it (or try another approach). Just out of curiosity, I circulated a list of our 600 exhibits among the Exploratorium staff and asked everyone to indicate which exhibits were their favorites or ones they would like to see in the Cookbook. Surprisingly, there was much agreement, and as I looked at the list I discovered that the exhibits the staff likes are also the ones I think teach the best. This made selecting exhibits for this publication much easier. The list of exhibits in this Cookbook matches pretty closely the choice of the staff (I sneaked in a few of my own favorites too—there had to be some advantage to writing this thing!).

Each recipe is divided into three sections. The "Description" section briefly tells what the exhibit is supposed to show and what the visitor does at the exhibit. The "Construction" section contains the details on how to build the exhibit as it now sits on the Exploratorium's exhibit floor. The last section, "Critique and Speculation," gives some of the problems that we have encountered with the exhibit, both mechanical and pedagogical. This section also suggests some possible improvements to the exhibit. These improvement ideas are included in this last section rather than in the construction details because they have not been tested. We have found that even trivial modifications to exhibits can profoundly affect their performance. We keep a watchful eye on a new or modified exhibit by placing it just outside our shop door; an exhibit stays there for a minimum of one month before being taken to its proper section of the museum.

In each recipe we have attempted to supply all of the essential information about the exhibit. If measurements or specifications are absent, it can be assumed that they are not critical, within obvious limits. We assume that you will adapt such non-critical features to your requirements and keep the same watchful eye on the exhibit that we do, knowing that changes in design can have adverse and unpredictable effects.

None of these exhibits should be considered absolutely fixed in design or construction, and you should feel free to modify the exhibits to suit your own environment, available materials, or personal aesthetics. Just keep in mind that these designs, as presented in this and other Cookbooks, have received extensive testing on our museum floor, and we can only guarantee that they work as they are.

The "Exhibit Design Checklist," which appears in this and previous Cookbooks, is a list of some of the things that are important to remember during exhibit construction. Most of the items are on the list because we have overlooked them in one or more of our exhibits in the past. Scanning this list before building an exhibit could save time, money, and some frustration. This checklist gives some specifics about building exhibits, and we have included a short excerpt from our publication *Working Prototypes*, which lists some of the broad philosophies of exhibit building at the Exploratorium. I encourage you to purchase the magazine, and read it carefully. It is available from the Exploratorium Store or from the Association of Science and Technology Centers (ASTC) in Washington, D.C.

Exhibit maintenance is a difficult and on-going task at the Exploratorium. Sometimes the proper operational modes of an exhibit are difficult to ascertain, especially if the original builder/designer has left the museum. To help us maintain some continuity in our exhibit repair, we have prepared exhibit documentation videos on some of our exhibits. These versions are specific to our versions of the exhibits and sometimes to our location. If you are interested in them, contact the Exploratorium for availability and pricing.

The Exploratorium also builds exhibits for other museums and institutions. Our Exhibit Services Group offers a wide range of support including museum design, thematic planning, exhibit design and production, and program development. The exhibits produced by Exhibit Services are based upon the exhibits our visitors use on the Exploratorium's museum floor. They are built for other institutions using the finest in materials, with a high degree of durability and handsome appearance. If you would be interested in knowing more about the Exhibit Services Group, please contact them through the Exploratorium.

If you have good ideas for new exhibits, we would like to hear from you. Send us your plans (it's a two-way street, you know) so that we can see—and maybe use—your discoveries and innovations.

Now get your fingernails dirty and start building exhibits!

Exhibit Design Checklist

Overall Exhibit Design

- ○ Visual design of exhibit automatically guides visitors to its use.
- ○ Power switch operated by seat or pedal is clearly marked.
- ○ Adequate space and mounting surfaces are provided for explanatory graphics.
- ○ Exhibit components and graphics are adequately lit, using backlit graphics for dark display areas.
- ○ Children can use exhibit easily.
- ○ Exhibit is accessible to people with wheelchairs or walking aids.
- ○ Lettering is large enough for people with impaired vision.
- ○ Speakers are tilted toward the visitor to localize sound from the exhibit.
- ○ Exhibit is carefully located and oriented on the floor.
- ○ Power and other utilities are available at the location of the exhibit.

Mechanical Design

- ○ Exhibit has a stable base and a low center of gravity (round removable weights make exhibits easy to move).
- ○ Exhibit has fork lift points and adequate overall strength for easy handling.
- ○ All internal parts, circuits, labels, etc. are securely fastened.
- ○ Windows and mirrors are plastic when possible to resist breakage.
- ○ Exhibit is built with quality components (they are usually cheaper in the long run).
- ○ Exhibit uses standard components and hardware to reduce the spares inventory and repair time.
- ○ Have hand cranks been considered in place of reversing electric motors?
- ○ Knobs have small radii or slip clutches to limit force.
- ○ Small loose parts, such as viewers, have counterweights sliding in vertical tubes with wire rope leashes passing through hardened bushings.

Accessibility

- ○ Wherever possible, subsystems can be removed for service.
- ○ Adequate work space is provided in exhibit enclosures and circuit layouts (hinged panels with wire harnesses work well).
- ○ Frequently replaced items such as lamps and tapes are accessible through a hinged door or a sliding panel with a lock.
- ○ All service panels are secured with the minimum necessary hardware (flush mounted locks are best).

Electrical Design

- ○ Power cord(s) are grounded and fused.
- ○ Exhibit power switch is easily accessible to the staff but not to the public.
- ○ Power switches switch both sides of the line.
- ○ All lethal voltages have special safety interlocks on access panels, with crowbar relays to discharge capacitors.
- ○ High voltage semiconductors have insulating caps.
- ○ All high voltages are conspicuously labeled.
- ○ Variations in line voltage are provided for.
- ○ A convenience power outlet is built into the exhibit for maintenance tools and for lighting.
- ○ Components prone to failure (such as tape decks and foot switches) have quick connectors.
- ○ Power cords have complete strain relief.
- ○ All wiring is shielded from sharp edges and abrasion.
- ○ Movable components such as lamps and headsets have special strain relief (tinselcord or test probe wire can be used in low current applications).
- ○ All common adjustments are easily accessible and clearly labeled.
- ○ All distinct subsystems can be isolated for testing or replacement.

Ventilation

- ○ Hot lamps and other components are vented and shielded from childrens' hands.
- ○ Airspace is provided around all electrical packages.
- ○ Convective openings are above and below all heat sources such as lamps, motors, and power supplies.
- ○ Filtered forced air cooling is used if needed.
- ○ Semiconductors and high wattage resistors have heat sinks adequate for all weather conditions.

Longevity

- ○ Complete checklist is drawn up for routine maintenance, with recommended intervals for checking levels, cleaning vents, lubrication, and so on, with an easy way to keep maintenance records.
- ○ Trouble shooting guide has been prepared when symptoms of failure are predictable.
- ○ Surfaces are all non-porous to resist wear and dirt (plastic is usually cheaper than paint in the long run).

Excerpt from Working Prototypes; Exhibit Design at the Exploratorium

by Pat Murphy

Exhibit development at the Exploratorium involves a great deal of play, learning, discussion, experimentation, and tinkering. Each exhibit develops in a different way, shaped by the interests and idiosyncrasies of the exhibit builder, the reactions of the staff and visitors.

The Exploratorium has no structural style to which exhibits must conform: the museum makes no attempt to dictate exhibit size, color, or shape. The look of an exhibit is dictated by its function and by the builder's preferences. As a result, *Curie Point*, *Light Island*, and *Tornado* all look quite different. However, there are some general principles and characteristics that apply to almost all the exhibits developed at the Exploratorium:

■ *Basic research—just plain tinkering around with something for the fun of it—is an essential part of the exhibit development process.* At the Exploratorium, approximately four-fifths of the cost of an exhibit is in the research and design and only one-fifth is in the final construction.

■ *Exhibits are designed and developed by people who are interested in the phenomenon to be displayed.* If the exhibit builder doesn't enjoy the exhibit and want to show it to other people, the exhibit is less likely to be successful. Often, the same person (or people) conceives of, designs, and constructs the exhibit.

■ *To some extent, all exhibits are collaborative: many people make suggestions and contribute ideas.* We have found that it's important to involve a diverse group of people, including artists and teachers, as well as scientists and engineers.

■ *The first stage of exhibit design is the construction of a full-scale working prototype.* Reactions to the prototype help the exhibit builder modify and improve the exhibit. Final version of the exhibit is often built around the material in the prototype. As a result, the nature and size of the exhibit are dictated by functional considerations and the phenomenon to be displayed.

■ *Exhibit builders are responsive to comments from visitors and staff, testing exhibits at many stages in their development and allowing reactions to shape the exhibit.* But at the same time, exhibit builders try to please themselves, constructing an exhibit that communicates their own excitement about a particular phenomenon.

■ *Exhibit builders pay attention to aesthetic nuances, noticing what is fun to do, what is beautiful, what is intriguing.* Each exhibit has its own aesthetic of some sort—visual, tactile, scientific.

■ *Generally, exhibit builders try not to restrict a visitor's choices.* Rather than just providing one thing for a visitor to try, an exhibit may give a visitor a few options, allowing room for experimentation and play.

■ *Ideally, visitors should be able to see the inner workings of an exhibit and make discoveries about how the exhibit works.* Usually, exhibits are built in a simple fashion to help visitors feel that they could, if they wanted, try the same thing at home.

■ *Most of our exhibits are free-standing and easily moved.* Almost all exhibits can be moved by one or two people or one person with a fork lift. Consequently, we can easily move exhibits to the shop for repairs or improvements. It is also inexpensive and easy to rearrange existing exhibits when we add exhibits to fill in pedagogical gaps.

■ *Most exhibits are set up on table tops, so that visitors can gather and use the exhibit together.* This arrangement encourages visitors to watch other people use exhibits and promotes social interaction between visitors.

■ *Exhibits are often constructed of inexpensive materials, scrap, and found objects (or junk).* As a result, an exhibit can be changed readily without much expense.

■ *Almost all of the Exploratorium's exhibits are built at the museum.* This allows museum staff to interact with the exhibit builder and the exhibit, and makes it easy to test the exhibit on the museum floor, a crucial stage in its development.

Of course, these are guidelines, not absolute rules. Though they describe our general approach to exhibit development, we could probably find successful Exploratorium exhibits that contradict each of them. In the end, we try to build exhibits that please our visitors as well as ourselves, to listen to comments, and always, to be willing to change.

Mechanics

Some of the pushes, pulls, and resistances that occur among objects are explored in this section of exhibits. In the *Falling Feather* exhibit, a feather and a small toy chicken are dropped inside a tube, with and without air in the tube—providing insight into Galileo's revolutionary discoveries about the nature of gravity. In *Downhill Race* you can explore the relationship between momentum and gravity by rolling wheels of different weight and mass distribution to see that a wheel with a heavy center hub accelerates much faster than a wheel with a heavy rim. In addition, you can see the relative nature of buoyancy as it is affected by the pressure of the environment in the *Descartes' Diver* exhibit. As any scuba diver knows, whether you float or sink depends on which weighs more—you or the water you are displacing.

Mechanics Exhibits in Cookbooks I, II, and III:

Descartes' Diver

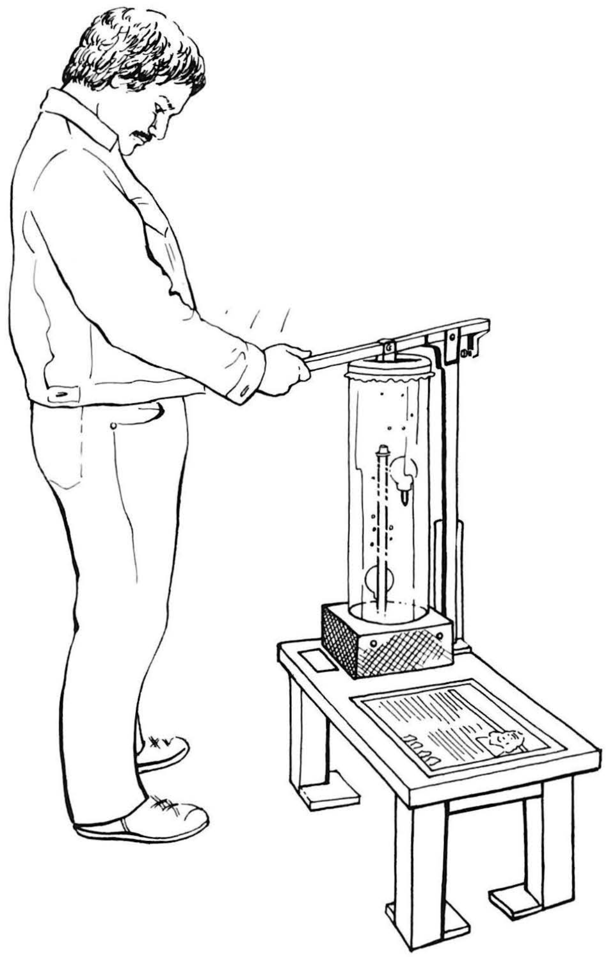

Description

This exhibit is a museum-sized version of the toy cartesian divers many of us made as kids. Two air-filled objects in a tall tube of water can be made to rise or sink by compressing or stretching a rubber membrane over the top of the tube. One of the objects normally floats when the exhibit is undisturbed, while the other object is bi-stable, either floating at the surface of the liquid or resting on the bottom, depending on where it was last moved to.

Construction

The main component of this exhibit is the large glass tube in which the objects float, which is made from 6'' diameter Pyrex acid waste drain pipe. Ours is about 24'' long, cut to length by the distributor:

Westchem Equipment Co. Inc.
28301 Industrial Blvd. Building P
Hayward, California 94545
telephone: (415) 782-3675

The pipe comes with a beaded edge at one end, which we use for the top; and a flat end, which we have silicone-sealed to a 1/2'' thick, 8x8'' aluminum plate. This aluminum plate acts not only as the base for the tube, but also as the water heater (see below).

The tube is filled with de-ionized water (with Zepherine Chloride antibacterial agent), after which two rubber membranes are stretched across the top. The bottom membrane (closer to the water) is a 1/16'' thick black rubber sheet which is moderately flexible; it is free of holes and punc-

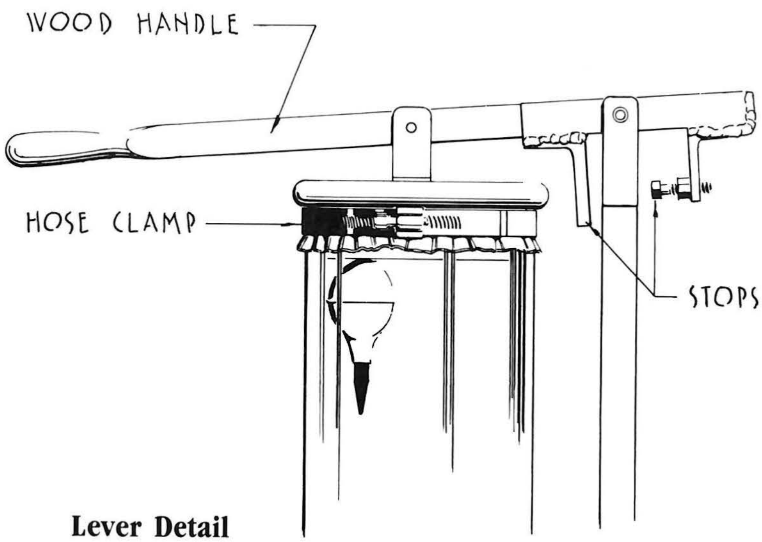

Lever Detail

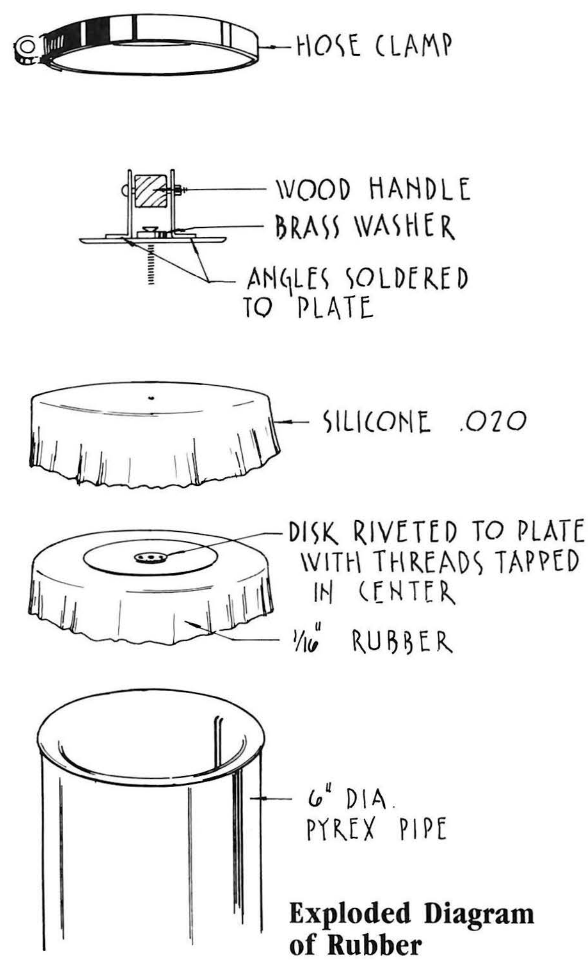

Exploded Diagram of Rubber Pressure Plate Membrane

tures and must form an air-tight seal over the tube. The top membrane is .020'' thick silicone rubber. (See detailed diagram of pressure plate assembly.) We use this silicone rubber for two reasons: it is very flexible and resists tearing when stretched; and we received a carload of it as government surplus. Because of the second reason, we cannot give any accurate specifications or sources for this material, but suggest that you talk to a local supplier. (You might be able to use the same material for both top and bottom membranes.) Note that all of the pulling is done with the top membrane. We allow air to become trapped between the two membranes as this allows for more uniform pressure on the bottom membrane. The membranes are cut large enough to allow them to drape below the glass tube bead, where they are held in place with a large stainless steel hose clamp. You may have to add an extra layer of rubber under the screw closure of the hose clamp to prevent damage to the membranes.

All of the pushing and pulling is accomplished with a lever connected to two 3-1/2'' diameter brass disks, one on top of and one below the top membrane. The bottom one is riveted (air-tight) to a thick brass washer on top, while the top disk is loosely coupled to the bottom one by a long screw that extends through the washer and into the bottom disk; this arrangement allows for even pulling of the membrane when the lever is raised. Both plates should be corner-rounded and smooth to prevent abrasion of the rubber. The lever has a stop in back of the fulcrum to limit its upward travel (see diagram); the downward travel is limited by the top of the glass tube itself, though you could also build a stop onto the lever in front of the fulcrum. The fulcrum is a pivot unit that is anchored to the table with 1'' square steel tube.

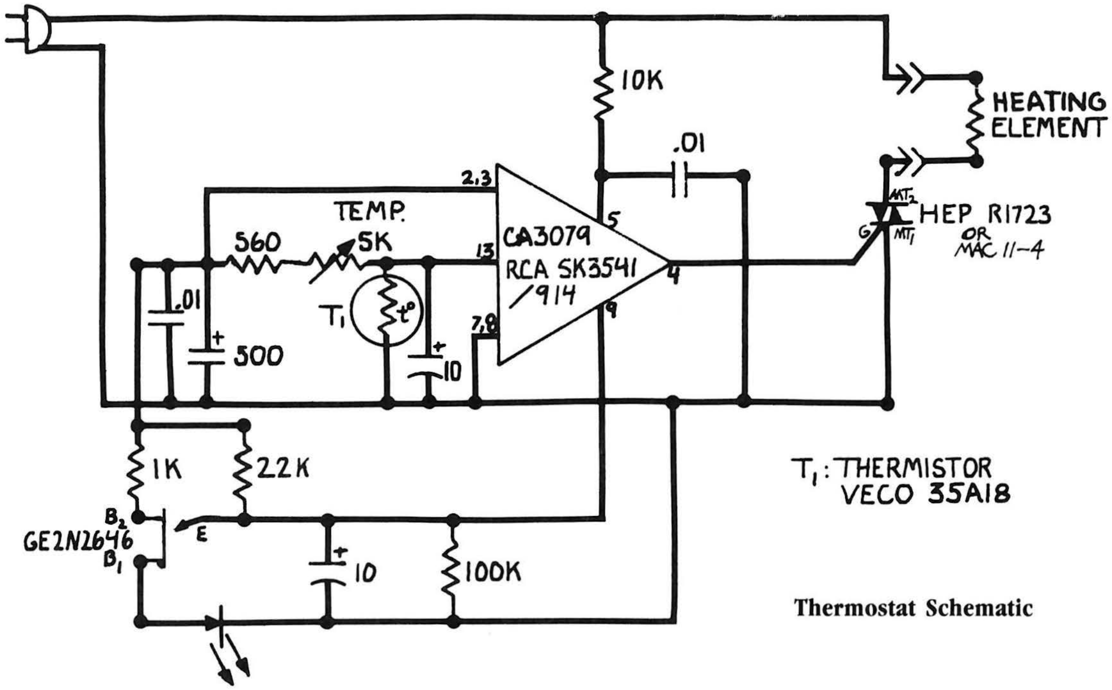

Thermostat Schematic

The floats in our tank are made from rubber squeeze-bulbs. They are available from scientific supply houses such as Van Waters & Rogers (order #56315-083) or American Scientific Products (order #R5000-3H [1 oz.] or #R5000-4 [2 oz.]). You can also use ear irrigation syringes available at most drug stores. The bulbs are filled with water until they have just the right buoyancy when their brass plugs are put in place. These brass plugs are machined to have slightly less mass than is necessary to sink the empty float. One of the floats is adjusted to float all the time but to be easily sinkable. The other float is adjusted (and this is delicate) so that it stays on the bottom when sunk or at the surface when floating; in other words, it is bi-stable. This adjustment must be made when the tank is at its operating temperature.

Because the density of water changes with temperature, the tank is kept stable with a thermostat and heater. Our thermostat measures the temperature near the center of the tank (16'' above the bottom). The temperature sensor is encased in an aluminum tube which extends from the base along the axis of the glass tube (see schematic for thermostat electronics). The tube is heated from below with 50 watt low resistance chassis mountable resistors, which are bolted into the bottom of the aluminum base plate. The thermostat tube also serves as a heat pipe, conducting heat from the base and distributing it more evenly. The base plate is mounted on a short table base with stand-offs that allow air to circulate around it. The electronics live in the space between the base plate and table. Screening around the base lets the air circulate while keeping inquisitive fingers out of the electronics. Be sure to make the base of your exhibit heavy and stable enough that it stays on the floor when a visitor pulls up on the lever.

Critique and Speculation

We are presently experimenting with glass floats, which make it possible to see the air being compressed inside. In their simplest form, these can be cylinders that are closed at the upper end; you just bubble enough air into the lower end to get the thing to float. Try a test-tube or medicine dropper for starters; later you can have a glass blower make something fancy.

Related Exploratorium Exhibits

Pressure

Gas Model I; Vortex; Visible Effects of the Invisible; Sound Column.

Fluid Mechanics

Air Reed; Balancing Ball; Convection Currents; Tornado; Sailboats; Strobe Fountain; Electrical Analogy.

Descartes' Diver

To do and notice

Press down steadily on the lever for a few seconds. Notice that the divers at the top will sink. By pushing down very steadily and gently, you can suspend the diver at any height that you choose.

If there is a diver at the bottom, pull steadily up on the handle. The diver will rise. You can also make it stop at any height.

What's going on

When you press down on the lever, the pressure is transmitted to the water. The water pushes on all sides of the rubber diver and makes it smaller. The smaller diver has less buoyancy than the larger one, and so it sinks toward the bottom of the tank. As the diver sinks, it gets into deeper and deeper water, and the increasing weight of the water above adds to the pressure that you exert on the diver.

When you pull up on the lever, you reduce the pressure on the water, and therefore on the diver. The rubber bulb expands, the diver becomes more buoyant, and begins to rise.

So what

The famous Greek philosopher Archimedes was the first person to notice that the upward force that water exerts on any object, whether floating or submerged, is equal to the weight of the volume of water that the object occupies. (That is, the buoyancy is equal to the weight of water displaced by the object.) If an object, such as one of the rubber divers, gets smaller, it will displace less water. Therefore it will not be buoyed up as much and will start to sink. Since ships float, their weight must be equal to the buoyancy of the water. Therefore, the weight of a ship is always expressed as its "displacement."

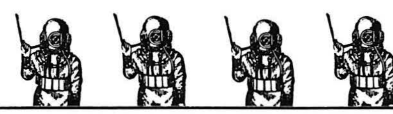

Downhill Race

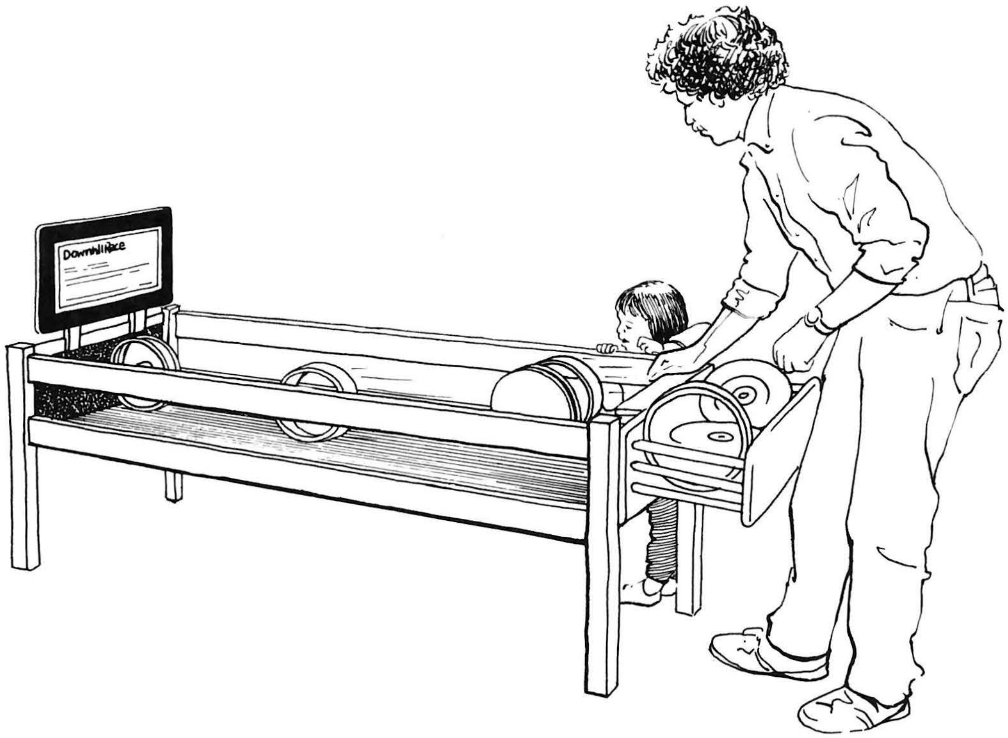

Description

Galileo demonstrated that all objects will fall at the same rate (with the same acceleration) regardless of their weight. *Downhill Race* demonstrates that not all round objects roll at the same rate, even if their weights are identical. The rate of acceleration (angular acceleration) of a rolling object depends not only on its mass, but on how that mass is distributed. This exhibit allows visitors to compare rings and disks (uniform, and edge- and center-weighted) as they roll down a smooth gentle slope.

Construction

Downhill Race is a slightly tilted crib—ours is made of oak and measures 2 by 6 feet. One end is 3'' higher than the other, providing the gentle slope. The legs at the high end have screw-type levelers for height adjustment. The bed of the crib is covered with a durable ribbed rubber matting, with the ribs running lengthwise. We found that the wheels tend to jam on the vertical side walls, so we inserted slightly angled wedges, covered with masonite (pine's too soft), along the bottom corners of the wall, and these deflect the wheels inward. The insides of the rails at the lower end of the crib have 1/16'' thick rubber sheet glued to them to prevent scarring when the wheels fall at the end of their travel; to provide a smooth transition from wood to rubber, aluminum moldings were made and screwed over the high end of the rubber sheet. To cushion the crashing of wheels, indoor-outdoor carpet has been glued to the inside of the lower end of the crib.

A variety of wheels are kept in a deep tray attached to the upper end of the crib. They are made of aluminum and polycarbonate plastic (''Lexan''), with the following specifications:

Plastic Wheels

1) Ring: 9''OD, 8-1/2''ID, 2'' wide
2) Disk: 2 ea. 9'' diam., 5/16'' thick disks, held apart by 1-3/8'' wide 2-1/4'' diam. hub. The disks are glued to the hub, and a bolt (1/4-20) passes through the center to add strength (see diagram)

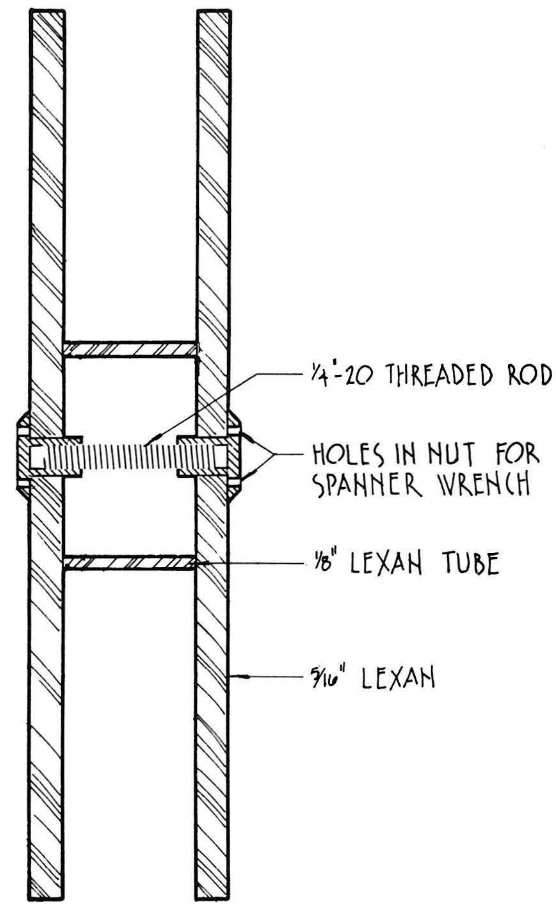

Generic Wheel Cross-Section

3) Rim weighted disk: same as #2 above except there are 2 extra 9'' OD 7-1/2''ID, 5/16'' thick rings glued to the inside of each disk
4) Center weighted disk: same as #2 above except the center hub is filled with lead shot

Metal Wheels

5) Same as #1 except made from aluminum
6) Same as #2 except made from aluminum
7) Thick, wide ring: 8-5/8''OD, 7-5/8''ID, 2-3/4'' wide (yours can be any dimension—this is just what we had in the shop at the time).

We keep on hand smaller rings that students come in and borrow. Because of their size, these rings get crunched by the other, larger ones; they also seem to disappear from the exhibit.

Critique and Speculation

As you can see from the drawing, the exhibit graphics were placed at the lower end of the ramp. This turns out to be the worst possible location, since you can't read them and use the exhibit at the same time. We suggest you somehow locate yours at the other end.

Related Exploratorium Exhibits

Moment of Inertia

Scaling; Pendulum Table; Adjustable Plaything; Chaotic Pendulum; Coupled Resonant Pendulum; Drawing Board; Balancing Stick.

Inertia

Resonator; Pendulum Table; Bicycle Wheel Gyro; Gravity Well; Gyroscope; Momentum Machine; Lunar Lander.

Accelerated Motion

Avalanche; Bouncing Ball; Tornado; Daisy Wheel Dyno; Falling Feather; Phase Pendulum; Reaction Time; Resonant Pendulum; Strobe Fountain; Vortex; Whirling Watcher.

Conservation of Energy & Momentum

Eddy Currents; Pedal Generator; Air Track; Pluses and Minuses.

Downhill Race

A wheel with a heavy hub accelerates faster than a wheel with a heavy rim.

To do and notice

Choose any 2 or 3 wheels and hold them at the top of the ramp. Let them go at the same time.

What's going on

When you race a solid disk against a hollow ring, the disk will win. When you race a wheel with a heavy hub against a wheel with a heavy rim, the wheel with the heavy hub will always win.

When a wheel is rolling down the ramp, every point on the wheel is both moving forward and traveling around and around the hub. The points that are near the hub of the wheel don't have far to travel; when they go around and around, they move in a small circle. The points near the rim of the wheel have farther to travel since they move in larger circles. If a wheel has a heavy rim, most of the wheel's mass must travel in a big circle as the wheel moves forward. If the wheel has a heavy hub, the mass doesn't have as far to travel.

It takes a push to make an object move, and once an object is moving, it takes a force to make it stop. The heavier something is, the harder it is to move and the harder it is to stop. This is common sense; you know that a shotput is harder to catch than a baseball. An object's inertia is its tendency to resist a change in motion, and it always depends on the object's mass. The wheel's resistance to moving forward is its linear inertia; its resistance to spinning is called its angular inertia. If two wheels weigh the same amount, they have the same linear inertia and it takes the same push to make them move in a line. But the two wheels may not have the same angular inertia since angular inertia depends on the distribution of weight on the wheel. The heavier a wheel's rim, the harder the wheel is to get spinning and the harder it is to stop.

So what

Bicycle wheels are light to minimize the energy that the cyclist uses to make them spin. "Sew-ups" and other light-weight tires were developed to minimize the weight at the rim, where it matters most. On the other hand, the flywheel of an engine, like our *Steam Engine*, is heavy, so that it stores energy: its angular momentum keeps the engine turning between strokes of the piston.

Please

When done, put the wheels back in the box at the top of the ramp.

Falling Feather

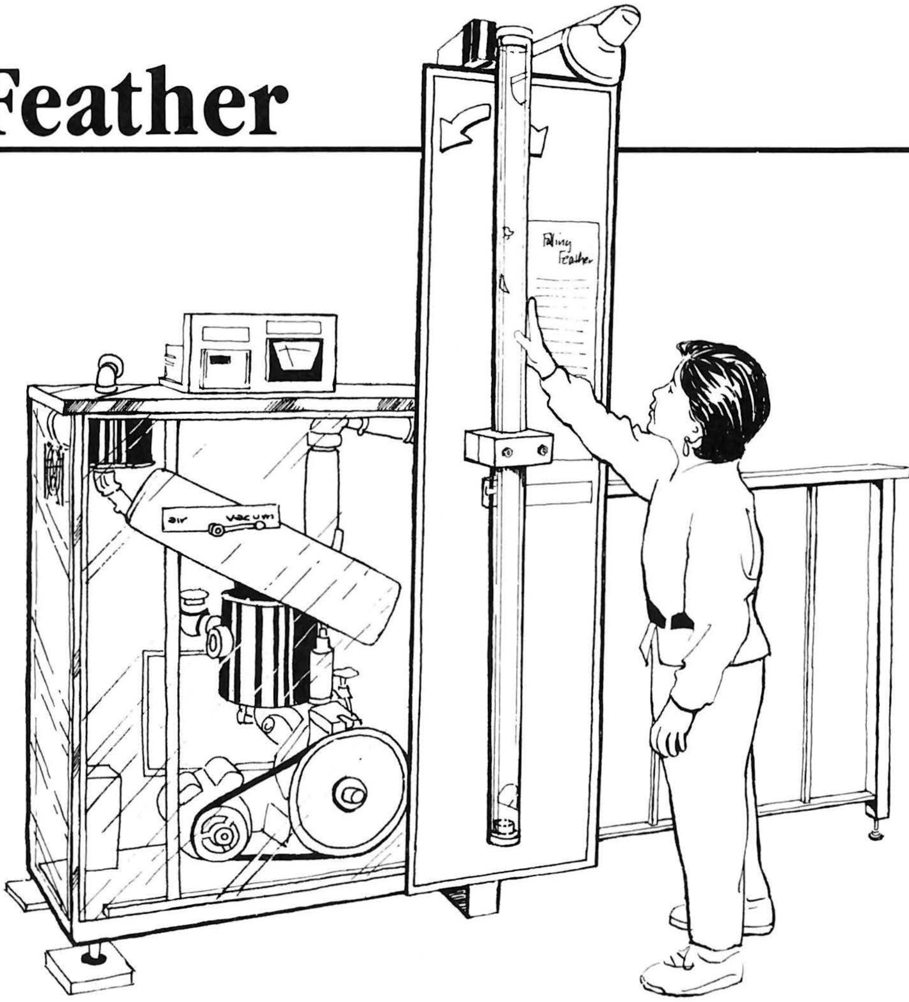

Description

All objects—light or heavy, of whatever shape or size—fall to earth with the same acceleration in the absence of air friction. In this exhibit a feather and a plastic chicken are dropped together inside a tube which the visitor can evacuate. The tube also pivots, so that when the objects fall to the bottom end, the thing can be rotated 180 degrees, and the objects again rest on a shelf on top. When the tube has air in it, the plastic chicken falls faster and hits bottom while the feather is still lazily descending. When the air is removed, both hit bottom at the same time. The exhibit is constructed so that the visitor may view all components including the pump.

Construction

This exhibit is tricky and should only be attempted by those with experience with vacuum systems (or people who have the time to gain the experience). It takes quite a while to learn the ins and outs of vacuum technology; we therefore recommend that you consider having a series of vacuum exhibits to amortize this time-investment over several displays. Because we will assume some prior experience with vacuum systems, only important hints and general descriptions of components will be given below.

To build *Falling Feather*, you need a pump that has a good pumping speed. It must be able to reach a pressure of less than 1mm mercury in a reasonable amount of time (10 sec). We use and recommend a Kinney KS-13 single stage vacuum pump, which pumps about 13 cubic feet per minute. It's driven by a high efficiency 3/4 horsepower motor, which allows us to plug it in anywhere in the museum without having to rewire the place. Be sure to get the pump with a smoke eliminator, which condenses the messy and mildly toxic mist of oil that issues from the pump. We leave the ballast valve on the pump CLOSED.

When the exhibit shuts off at night, a solenoid valve vents the pump to atmosphere. (If a vacuum were maintained, oil would be sucked into the pump making it very hard to start in the morning—oil, like all fluids, cannot be compressed.)

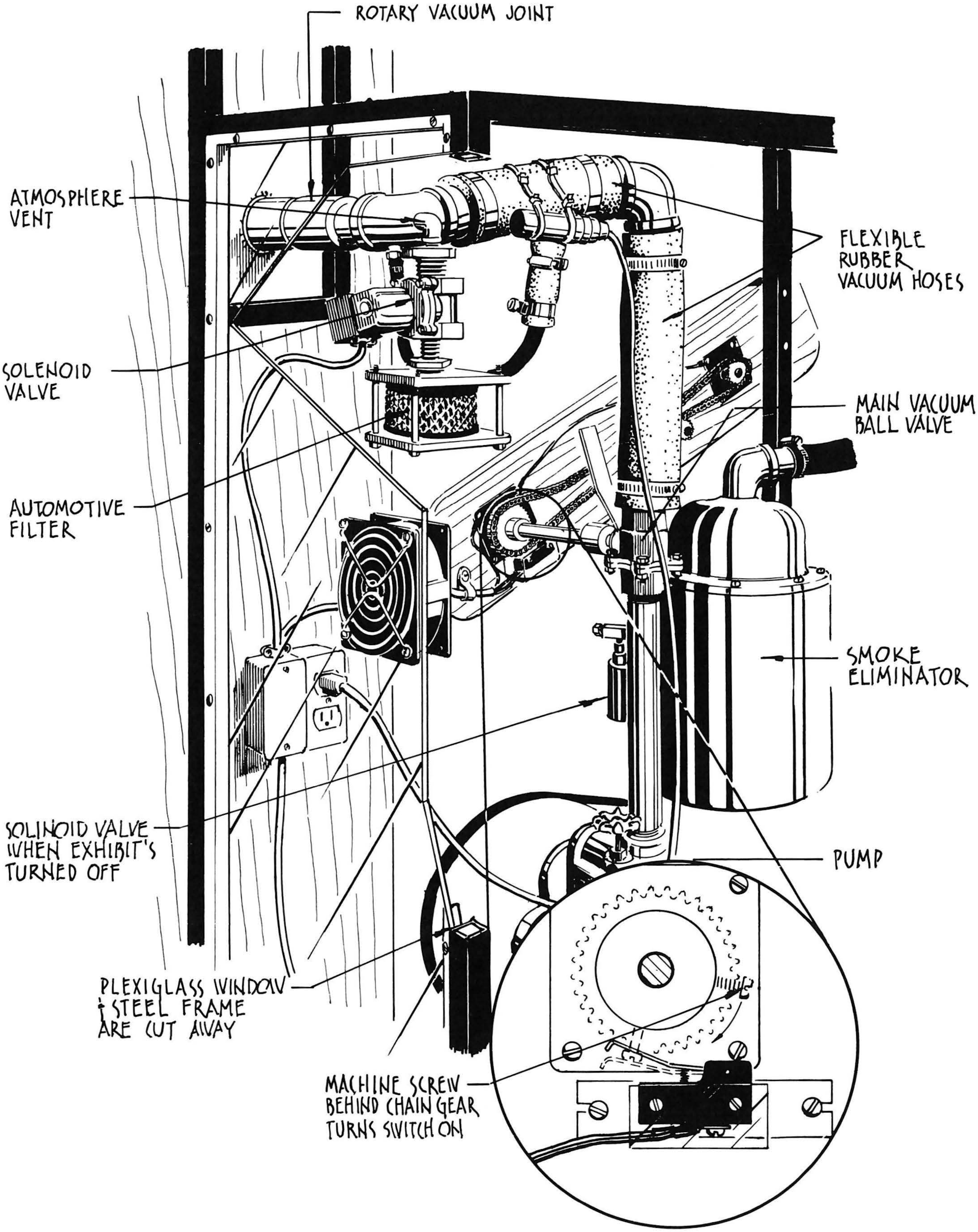
ROTARY VACUUM JOINT
ATMOSPHERE VENT
FLEXIBLE RUBBER VACUUM HOSES
SOLENOID VALVE
MAIN VACUUM BALL VALVE
AUTOMOTIVE FILTER
SMOKE ELIMINATOR
SOLINOID VALVE WHEN EXHIBIT'S TURNED OFF
PUMP
PLEXIGLASS WINDOW & STEEL FRAME ARE CUT AWAY
MACHINE SCREW BEHIND CHAIN GEAR TURNS SWITCH ON

Rotary Vacuum Joint

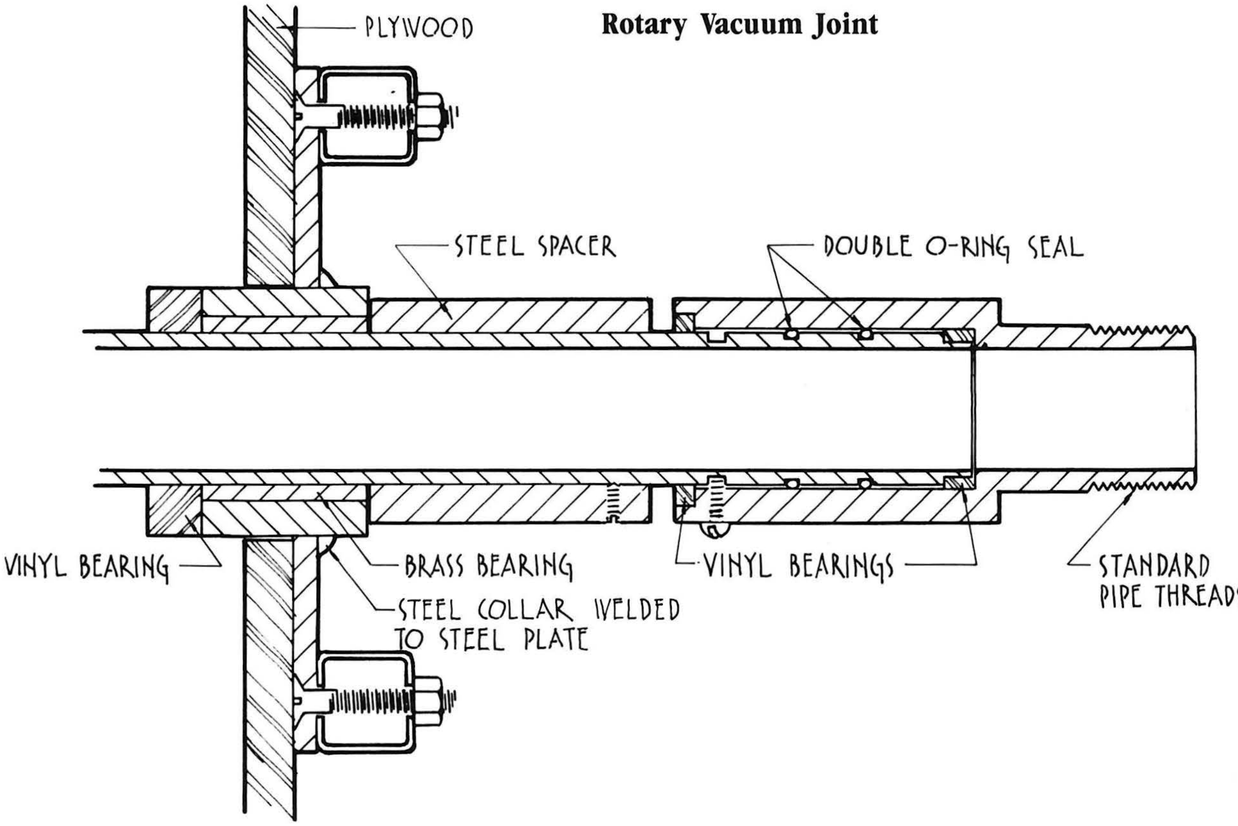

In front of the night-vent valve is the main vacuum ball valve that the public operates. Ours was too low for easy operation so we connected it with a chain drive to a higher handle on the exhibit case. When this valve is open the air is drawn from the tube; when it's closed it actuates a switch that opens another solenoid valve to vent the tube back to atmosphere. This vent—a hose connected to an automotive air filter—attaches to a tube welded into a 90 degree pipe bend at the rotational axis of the plastic exhibit tube. The vent tube extends towards the access hole in the plastic tube and blows off any feathers that may have gotten stuck there.

Above the ball valve the vacuum line is attached to a rotary vacuum joint with flexible rubber vacuum hose. It is important to use two pieces of hose at right angles to each other to isolate the exhibit from pump vibrations; if necessary, put the pump in a box entirely separate from the exhibit (the only problem with this strategy is that the exhibit becomes difficult to move). The rotary joint (see cut-away) is one pipe inside of another with a double O-ring seal. We've packed silicone grease between the O-rings.

Our plastic tube is 72'' long and about 3'' inside diameter. It is held in the rotary vacuum joint with a split-block clamp. The ends are capped with nylon plugs sealed with slightly greased O-rings (be sure not to get any grease in the tube or the feather will stick there). The inner surfaces of the end caps are dished to keep the objects from bouncing back up the tube. Also at both ends of the tube are small wedge-shaped aluminum shelves. Our shelves are bolted through the tube with O-ring seals on the bolts; you could glue in plastic shelves once you're sure of the correct size. These are designed so that as the tube is rotated, the objects end up sitting on the shelf at the top of the tube until the visitor decides to bump them off.

Detail: Tube End and Stop

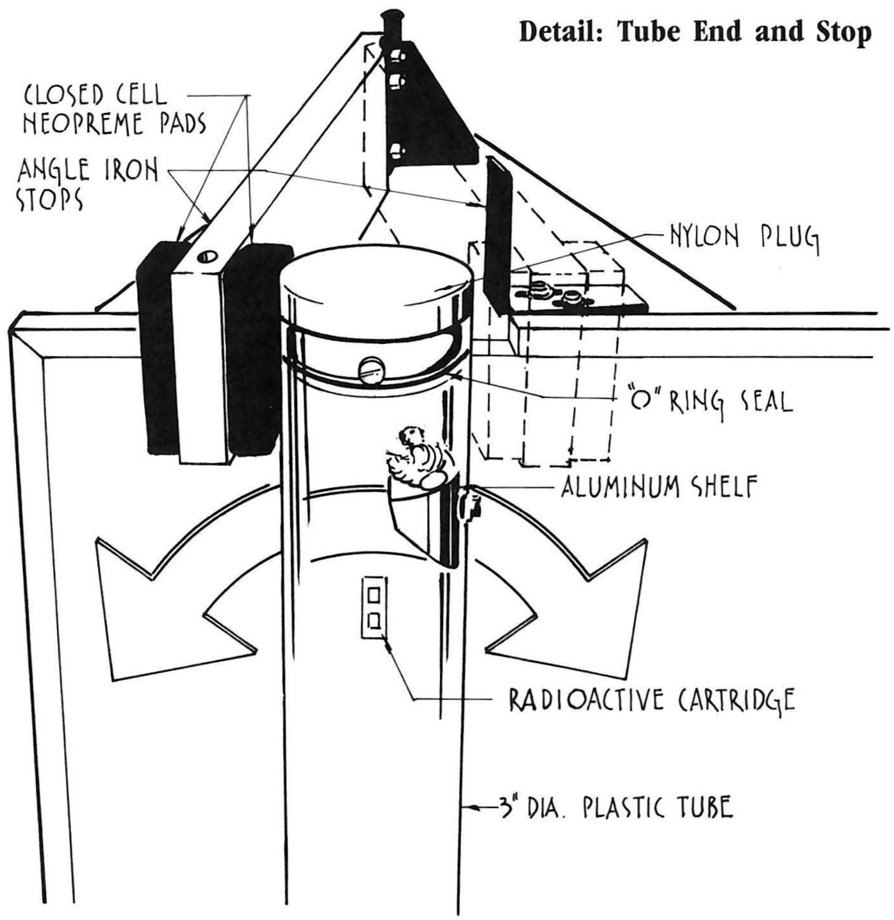

The tube is only allowed to rotate 180 degrees. We have designed a movable stop that will stop the tube just as it rotates to vertical from either direction (see diagram). The stop must be padded since the tube sometimes collides pretty hard; we use 3/4" thick closed-cell neoprene rubber pads (similar to wet-suit material). The movable stop is also padded where it hits the angle iron stops that determine its extreme right and left positions.

As previously mentioned, our "heavy" object is a small plastic chicken. It was chosen because it won't mar the plastic tube or pummel the feather too severely, as would steel ball bearings. We buy our plastic chickens at Toys R Us. Unfortunately, you have to buy the whole barnyard to get the chicken, but the $2.00 investment shouldn't cause you any great fundraising difficulties. The feather is purchased from a costume supply house and must be light and "downy". We trim our feather so that it will easily sit on the tube shelf.

The tube has a tendency to become electrically charged and attract the feather. We've solved this problem by attaching a radioactive cartridge at each end, to provide a small source of ionizing radiation that will discharge the inner surface. These cartridges are the same as in static eliminating photographic brushes ("Static Master") and are available at most professional photographic suppliers, or from:

Nuclear Products Company
2519 North Merced Ave.
South El Monte, CA 91733
telephone: (213) 444-3852 or (213) 283-2603

Due to the fact that the Polonium 210 has a relatively short half-life, you will have to replace these cartridges every couple years.

The tube has quite a broad swing and must be guarded so innocent

bystanders don't get bashed by it as it rotates. The exhibit frame itself guards the left side; we built a railing onto the right side of the exhibit to keep people from standing there.

Since the pump shakes a lot it's important to keep the exhibit sitting solidly on the floor. We put leveling feet at all four corners of the exhibit housing and under the railing.

Critique and Speculation

This exhibit takes surprisingly little maintenance but it is maintenance that MUST be done. The oil level should be checked frequently, and we've found that the oil must be changed about every 6 months to 1 year; we use Turbo 68 oil in the pump. If you want to build another exhibit using the same pump as this one see the *Water Freezer* recipe in this Cookbook.

Related Exploratorium Exhibits

Accelerated Motion

Avalanche; Balancing Stick; Bouncing Ball; Chaotic Pendulum; Daisy Wheel Dyno; Downhill Race; Gravity Well; Lunar Lander; Phase Pendulum; Reaction Time; Vortex; Tornado.

Energy Transformation

Air Pump; Bicycle Legs; Glass Bicycle Pump; Heat Pump; Rumford's Very Dull Drill; Strange Attractor; Curie Point; Phase Pendulum; Automotive Ignition; Gravity Well; Coupled Resonant Pendulums; Bulbs & Batteries; Energy vs. Power; Low Frequency Light; AM Radio; Slow Charge/Discharge.

Time

Geochron; Survival of the Fittest; Sun Dial; Time Piece; Kinetic Light Sculpture; Kettle Drum; C the Light; Induction; Triple Aye Light Stick; Reaction Time; Music Box; Balancing Stick; Recollections; Sound Column.

Exploratorium Exhibit Graphics

Falling

Feather

If you were to drop a feather and a rock in a vacuum, both would hit the ground at the same time.

To do and notice:

Turn the pump valve to the left and the clear plastic tube will fill with air.

Rotate the clear plastic tube. Let it bump against the stop so that the feather and the plastic chicken fall off the shelf. Notice that the feather floats down slowly; the plastic chicken hits the bottom of the tube first.

Turn the pump valve to the right and wait a few seconds while the vacuum empties air from the tube. Turn the tube over again and watch the feather and the chicken fall.

What is going on:

Both the feather and the chicken must push aside the air as they fall. The air molecules resist being shoved aside. When you drop two objects in the air-filled tube, air resistance slows the falling feather more than it slows the plastic chicken because the feather has a large surface area relative to its weight.

Any object falling through a gas reaches a terminal velocity, the speed at which the friction of air resistance pushing up is equal to the force of gravity pulling down. At its terminal velocity, the object stops accelerating and falls at a constant speed. The feather's terminal velocity is much smaller than the chicken's terminal velocity, so the chicken reaches the bottom of the tube first.

When you turn the pump valve to vacuum, there is very little air to resist the falling feather. Both objects accelerate at the same rate and hit the bottom of the tube at the same time. It is easy to forget that the presence of air affects falling objects since we are used to living in a world surrounded by air.

By eliminating air resistance, this exhibit demonstrates something that Galileo discovered back in the early 17th century: two different weights, dropped an equal distance, fall at the same speed. You might think that since gravity exerts less of a pull on the feather, the feather should move more slowly through the vacuum than the chicken. But you have to remember that the heavier something is, the harder it is to move and the harder it is to stop. (For example, a shotput is harder to throw and harder to catch than a baseball.) An object's inertia is its tendency to resist a change in motion, and it always depends on the object's mass. The feather weighs less than the chicken, but it also has less inertia and doesn't resist being moved as much as the chicken does. The pull of gravity and the resistance of inertia always balance out.

Gyroscope

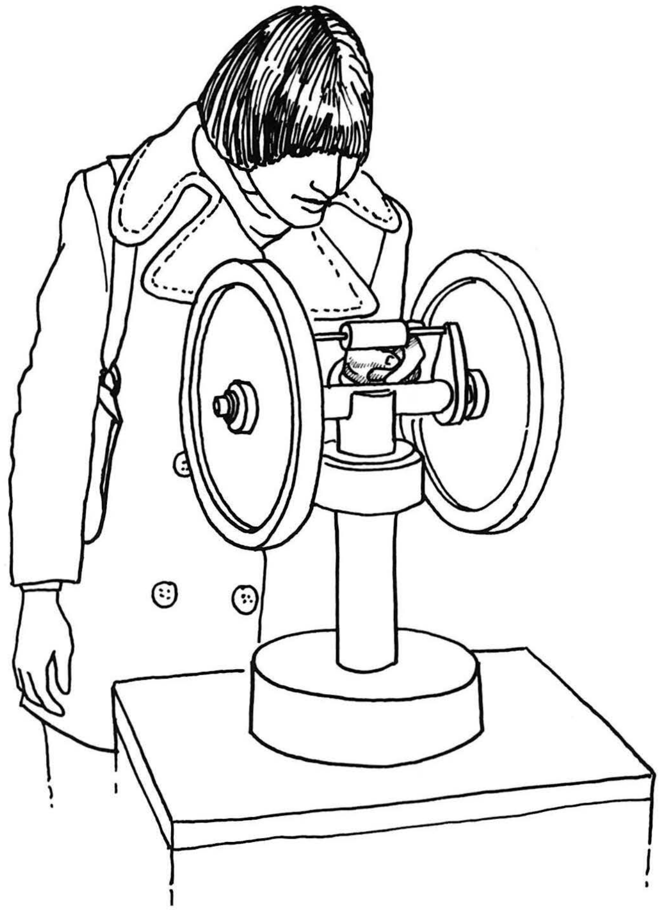

Description

This exhibit demonstrates the non-intuitive forces and motions one experiences when dealing with gyroscopes. Our gyroscope, unlike most, has two wheels mounted independently on the same axle, so you can add and subtract their angular momentum, depending on which direction you spin them; if they're spun in the same direction, their angular momentums combine, while if they're spun in opposite directions, they work to cancel each other out. A sliding weight above the axle provides an adjustable but constant force for experimenting with the phenomenon of precession.

The gyro apparatus is mounted on a table which in turn is mounted on a set of good casters. When the gyroscope is spun up and the sliding weight set for no precession (in the middle), the exhibit can be moved around the museum floor and the gyro won't change its spatial orientation (much).

Construction

Our particular version of this exhibit is a nicely crafted and machined aluminum gyroscope. The wheels are 12" in diameter, held about 12" apart by an axle that pivots on a horizontal axis. The pivoting axle support itself pivots on a vertical axis, giving the wheels complete freedom of movement (within certain limits). All pivots have ball bearings to reduce friction as much as possible; we use light machine oil rather than grease in the bearings to further reduce friction. See the mechanical drawings for construction details.

The sliding weight should slide with some friction on its rod, so that it doesn't move on its own and ruin visitors' experiments. The rod and weight assembly is held in place with split clamps at each end of the wheel axle.

Be sure to use good quality casters on the table to assure smooth movement over the floor. This was particularly difficult with our asphalt floor; you'll probably have less of a problem. Since the table moves, the exhibit graphics are also mounted on the table, so the exhibit can't wander from its text.

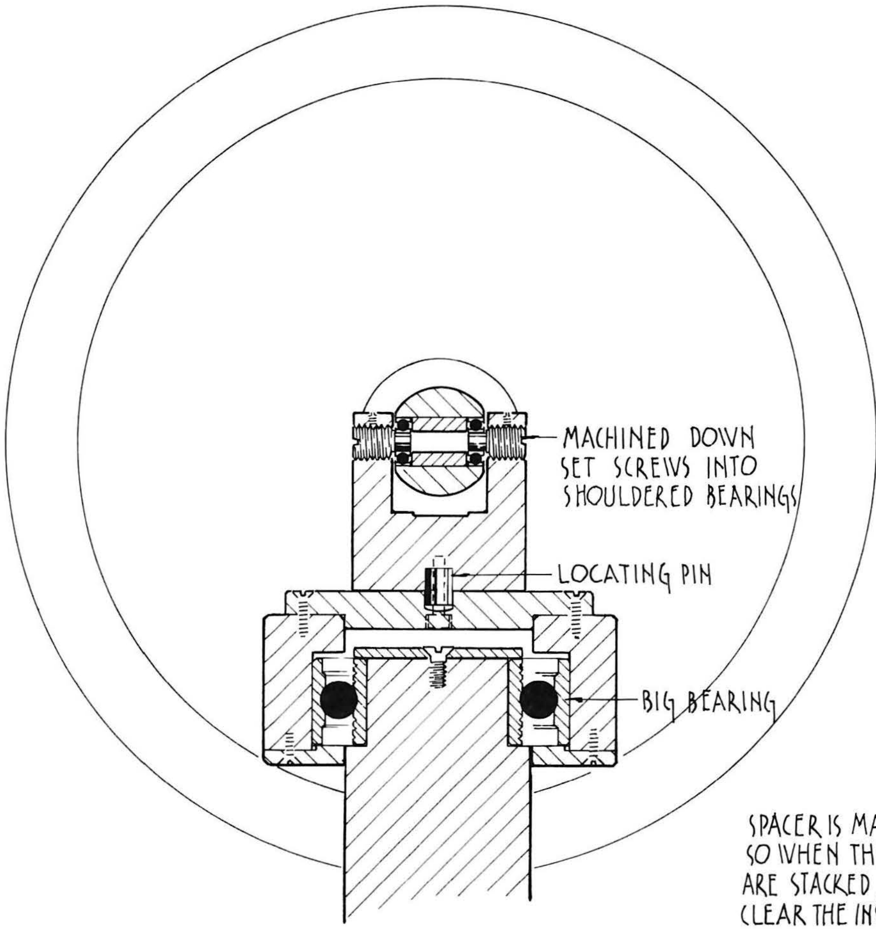

Axle Bearing Section

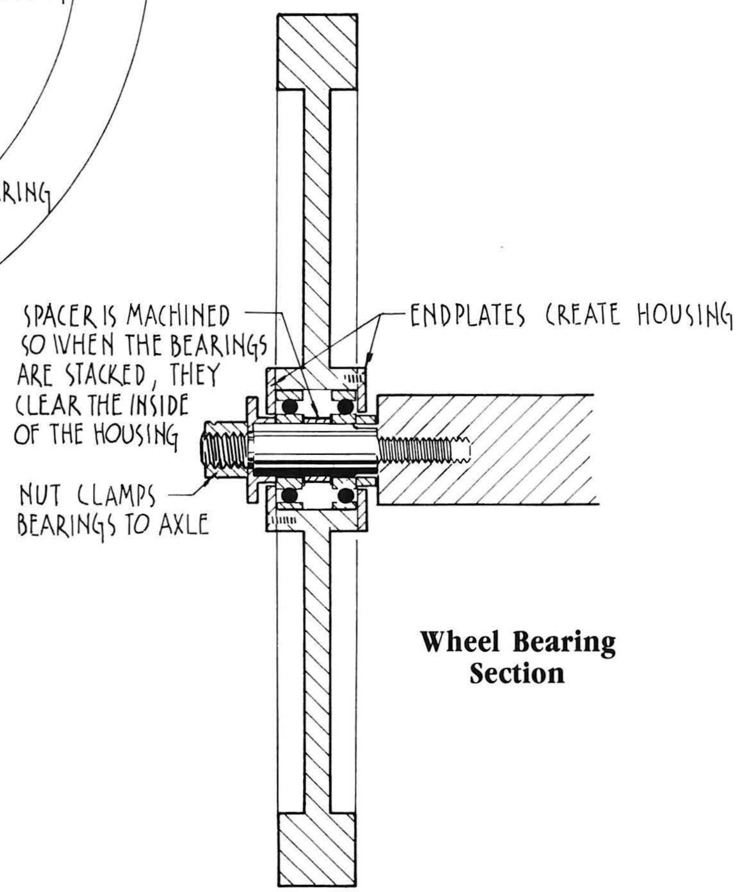

Wheel Bearing Section

Critique and Speculation

Build this exhibit strong—it gets a lot of abuse and should be carefully observed when first put out on your floor. Most of the problems arise because the wheel axle smashes against its limits. Some rubber stops would help here.

It might be nice to put a spring detent near the center of the sliding weight rod to let the visitor know when the weight is centered.

Related Exploratorium Exhibits

Conservation of Angular Motion
Bicycle Wheel Gyro; Gyro Chair; Momentum Machine; Lunar Lander; Balancing Stick; Vortex; Tornado; Chaotic Pendulum.

Frame of Reference
Rear View; Differential; Model Differential; Two Wheels and a Ball; Relative Motion Pendulum; Reach for It.

Inertia
Resonator; Downhill Race; Pendulum Table; Adjustable Plaything; Gravity Well.

Gyroscope

This exhibit shows how a spinning object resists motion.

To do and notice

Find the sliding brass weight on the gyroscope. Center the weight, and then spin both wheels at once in the same direction. Swivel the table around underneath the gyroscope. Notice that the gyro assembly keeps its position, with the wheels still pointing in the same direction.

Push the brass weight to one side and notice that the entire gyro assembly starts to revolve around the vertical axis.

Tap the bar holding the spinning wheels and notice that the gyro starts to wobble. This wobbling motion is called *nutation*.

Stop the wheels, center the brass weight, and start the wheels spinning again. This time, grab the central hub and twist it, as shown in the diagram. Be careful to keep your fingers on the sides and not on the top of the hub so they don't get caught. Notice that if you twist the hub one way, one wheel drops, and if you twist the hub the other way, the other wheel drops.

Stop the wheels and twist the hub again. Notice that the hub twists much more easily when the wheels aren't spinning than when they are.

Electricity and Magnetism

All matter contains positively charged protons and negatively charged electrons. Normally, these charges are in some kind of balance. The exhibits in this very large section let you see some of the extraordinary phenomena that occur when you separate the positive and negative charges. In *Electrical Fleas* and *Pluses and Minuses*, charges move from surface to surface via bits of jumping formica or styrofoam. In *Batteries and Bulbs* you can play with making a variety of pathways (circuits) for the charges to flow in. This flow, or current, can be experienced more directly as it heats up and melts a thin wire in *Short Circuit*, or even gives you a small shock in *Finger Tingler.* There are numerous exhibits that let you see the intimate relationship between electricity and magnetism. The *Transformer* lets you see how a changing magnetic field can create an electric current. And you can see the converse of this when an electric current flowing through a wire creates a magnetic field in *Magnetic Suction*. This electric-magnetic relationship is the fundamental principle for motors and generators. In the *Daisy Wheel Dyno* you can see the motor turn as the field of a magnet pushes against another magnetic field produced by an electric current. The words used to talk about electricity can often be misleading. We neither "make" nor "use up" electricity when we turn on an electric fan. In *Pacific Gas and Leather* you move a lever that moves a series of leather belts, which connects through gears to a fan that spins. It's easy to see that you don't make or use up leather to make the fan spin—the leather simply conveys energy from one place to another. Similarly, what you pay for in your electricity bill is energy, not electricity. *Watts the Difference* demonstrates that the same amount of electrical energy can be delivered in different ratios of voltage (pressure) and amperage (current), as long as their product is the same (volts x amps=watts).

Electricity and Magnetism Exhibits in Cookbooks I, II, and III:

Color Television and Magnetism

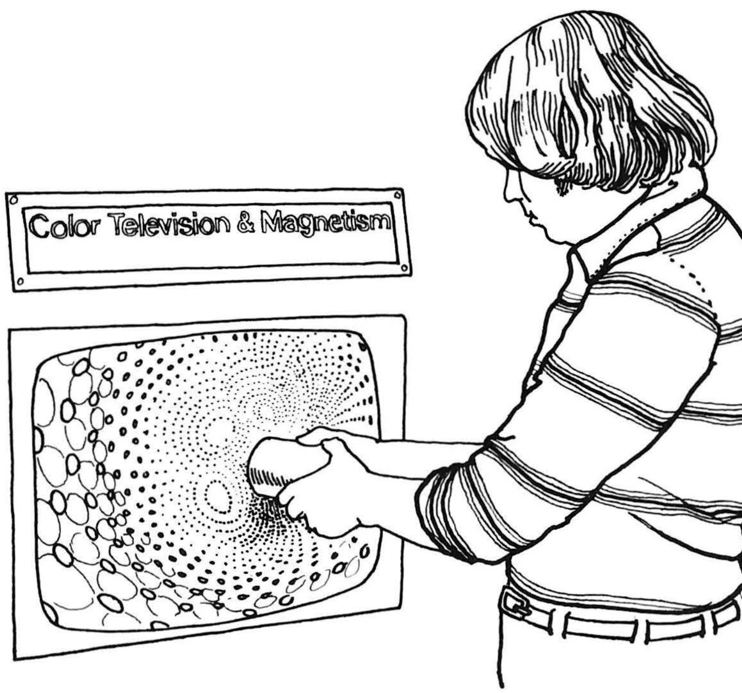

Description

The visitor holds a powerful magnet to the rather bland looking screen on a color television. The paths of electrons in the tube are bent to form beautiful color patterns never intended by the TV's manufacturer. The colors and patterns can be changed depending on the distance and orientation of the magnet from the TV.

Construction

This exhibit calls for the sacrifice of a color television. We have used a 17'' diagonal portable set (now no longer portable since it is bolted to the table). All knobs should be removed from the front of the set (they will serve no function anyway). To protect the picture tube, we have bolted to the front of the set a piece of 5/16'' thick Lexan (polycarbonate) that covers its entire face. This cover is very important since the visitor will be using a large and heavy magnet near the screen.

In our version the screen is flooded uniformly by one electron gun. To achieve this effect, the raster signal must be present without the modulating video signal. Here are two possible ways to do this:

1) Disconnect the tuner from the IF stage of the TV.
2) Try to measure what the average bias is on the red, green, or blue gun video signals with a white screen. Disconnect the guns from the rest of the circuitry and provide the correct bias using the TV's power supply and the proper voltage dividing network.

The magnet we use is a horseshoe style magnet which is attached to the exhibit with steel cable. Put a swivel in the cable so kids won't twist it to the breaking point and take the magnet. Good ball bearing swivels are available from:

Sanpo Swivels
18011 Skypark Cr., Suite K
Santa Rosa, CA
telephone: (714) 979-2980

To keep the cable from tangling, we've hung the magnet from a steel post about 2 feet above the table top. The height of this post and the length of the cord will depend on the physical layout of your exhibit. Be sure that the magnet can reach to all portions of the TV screen.

The magnet is completely covered with 1/8" thick rubber sheet glued on with silicone sealant. This rubber covering protects the magnet, the screen shield, and even the people who use the exhibit. Large horseshoe magnets can be constructed with ceramic magnets, available from:

Dowling Miner Magnetics Corp.
21707 Eighth Street East
Sonoma, CA 95476
telephone: (707) 935-0352, or in California, (800) 535-4471

Dowling is a good source for all sorts of magnets that you can use for exhibits or sell in your museum shop; they even have an educational magnet kit available.

Be sure to warn people in the exhibit graphics NOT to try this with their color TVs at home—a strong enough magnet may permanently damage the tube.

Critique and Speculation

If you aren't confident enough to carve into the guts of a TV set, tune to an unused channel with only snow on the screen and try the magnet. You should see the same effect overlaid with snow—not as pleasing, but much easier!

Related Exploratorium Exhibits

Electromagnetic Forces

Black & White TV and Magnetism; Black Sand; Circles of Magnetism I-IV; Earth's Magnetic Field; Earpiece; Glow Discharge; Seismograph; Bulbs & Batteries; Slow Motion Switch; AM Lightning; Polaroid Projector.

Fluorescence

Fluorescent Rods; Electromagnetic Spectrum; Fluorescent Tube; Solar Signature; Glow Wheel.

Exploratorium Exhibit Graphics

Color Television and Magnetism

By holding a strong magnet near a TV screen, you can change the patterns on the screen.

To do and notice

Pick up the large magnet and move it slowly toward the television screen.

Notice that the colored patterns on the screen are made up of red, blue, and yellow-green spots. Turn the magnet and notice how the colored patterns change.

Do *not* try this on your own television set. It will ruin your television.

What's going on

The inside of a color TV screen is covered with color phosphors, dots that glow red, blue, or yellow-green when they are hit with a beam of electrons. In most color TV's, the picture is drawn with three moving electron beams. In this TV, only the electron beam that would normally strike the yellow-green phosphors is turned on; the other two are turned off.

A magnetic field can change the path of a beam of moving electrons. When you bring the magnet near the TV screen, the magnet's field magnetizes the perforated iron mask that is behind the TV screen. The magnetic field of the magnetized mask deflects the electrons of the electron beam. Instead of hitting the yellow-green phosphors, the electron beam hits the red and blue phosphors, creating the patterns that you see on the screen.

Bringing a strong magnet near a television leaves the iron mask within the set slightly magnetized. That's why there are colored patterns on this screen even when you take the magnet away. If a magnet had never been used near this set, the screen would be uniformly yellow-green.

Recipe No. 140

Daisy Dyno

Description

The visitor touches a wire to the edge of a copper disk which sits between the poles of a large magnet. The current (electrons) flows from the edge to the center of the disk, where contact is made to the other side of the power supply via a commutator and carbon brush. If the wire touches the disk such that the current flows through the magnetic field, then there is a force on the charges that make up the current, and therefore on the metal that contains them. The disk starts to spin, demonstrating the motor effect.

Construction

Daisy Dyno consists of three main parts: the disk assembly, the magnet, and the power supply.

The disk is made of copper (necessary for good conduction) and is 12'' in diameter and about 1/32'' thick. It is slotted along 24 radii with bandsaw cuts that start at the outer edge and extend 3-1/2'' toward the center; these slits direct the flow of electric current from the edge to the center of the disk. The copper disk is mounted on a 12-1/2'' diameter lexan disk with double stick tape, with a 1/2'' wide lexan retaining ring around the edge. The lexan adds the necessary amount of support to the thin copper disk so it won't get bent. The disk is mounted on a 3/8'' diameter steel shaft, which is supported from below by two bearings mounted 2'' apart in a block of aluminum. The bearing block is mounted to the table with a steel "L" bracket. (Washing the grease out of the bearings and replacing it with a very light oil will reduce the friction.)

The commutator assembly is a simple 1-1/2'' cylinder of copper bolted on top of the copper disk, with a carbon brush riding on the top. The brush assembly is mounted on a 3/4'' dia. solid steel rod, which is welded to a steel plate that bolts to the table top. Our carbon brush assembly was taken from a 6 volt Volkswagen generator; this way we knew that it would handle the current, and we got a brush holder in the bargain. You don't have to go stealing generators out of old Volkswagens, though—just talk to a local shop that repairs large motors or generators. We put a plexi cover

Disk Bearing Assembly

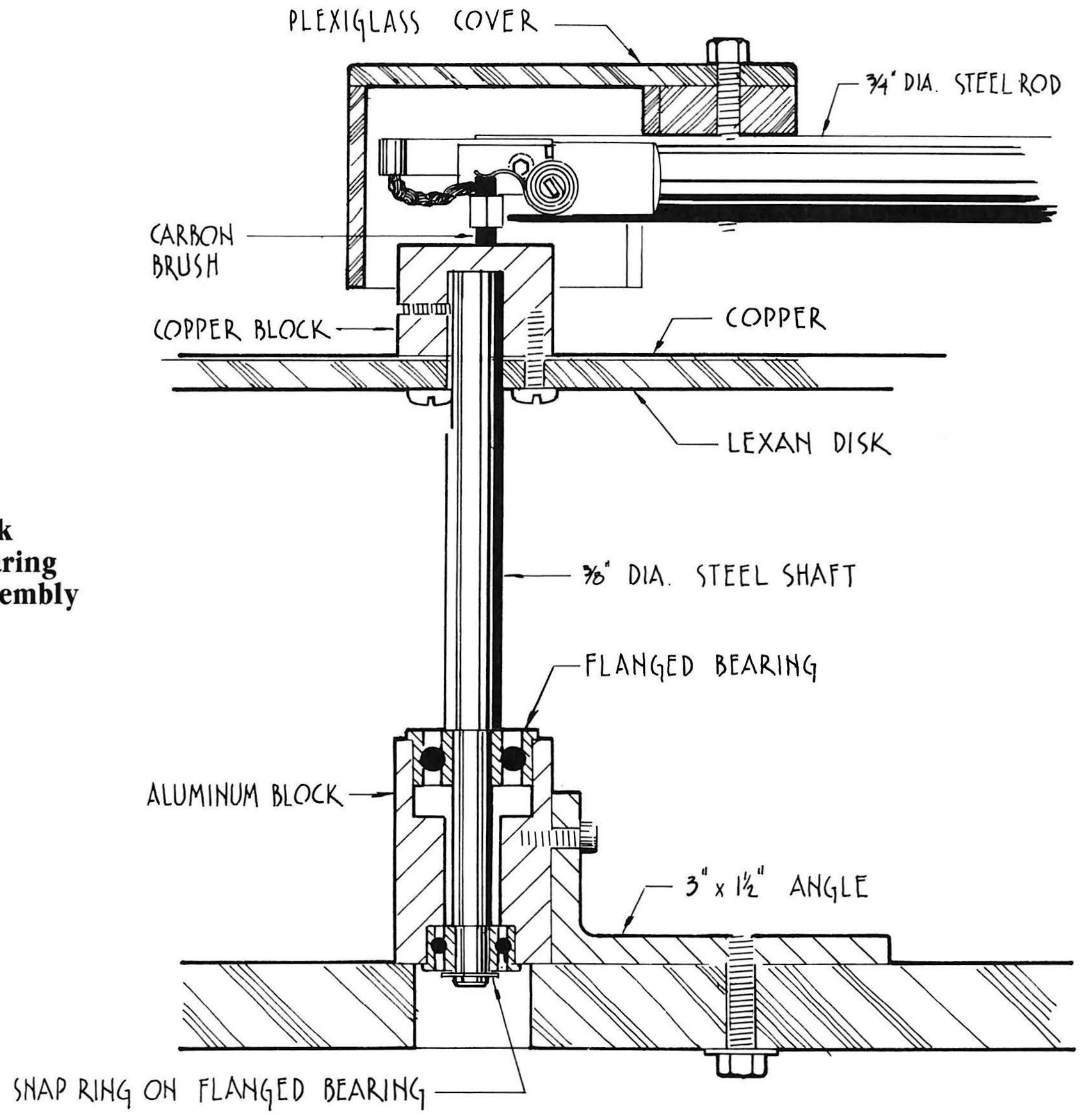

over the brush to protect it from curious fingers.

The power source must be able to supply 10 to 20 amps of current for considerable periods of time. Ours measures about 5 volts open circuit. Note that, in essence, the power supply is shorted out when the visitor touches the wire to the disk, so it must be capable of tolerating this punishment. A high wattage resistor of a few ohm in series with the output will limit the current to a reasonable value. No need to have the visitors arc welding with the exhibit.

The output terminals of the power supply extend to two bolts on a piece of plastic on the table top. Do not use bolts through wood for these high current connections (we charred the table learning this). The wires to the exhibit connect to these terminals. One wire (+) is screwed to the base of the commutator arm. The other (-) extends out a few feet and through a handle—this is the one that the visitor holds to the wheel. The wooden handle is simply a piece of hardwood dowel drilled longitudinally for the wire, with one end of the dowel slotted and hose-clamped to hold the wire in place. We also restrain the wire with a steel cable and weight in a vertical PVC pipe; this retractor mechanism keeps the wire in an obvious place for the next user. All wires are 10 gauge stranded wire with rubber insulation. The insulation on the user's wire is stripped back about 1/2''. As the wire burns back it is moved up in the handle (by loosening the hose clamp) and then restripped.

Our magnet is a war surplus radar gap magnet. These magnets are extremely difficult to find. You might be able to build a strong magnet from large ceramic magnets like those found in speakers. A good source of magnets is:

Dowling Miner Magnetics Corp.
21707 Eighth Street
Sonoma, CA 95476
telephone: (707) 935-0352, or in California, (800) 535-4471

Dowling is also a good source for magnets that you can sell in your museum shop, and even has an educational magnet kit available.

The magnet is mounted vertically with a welded steel bracket. In order to concentrate the magnetic field, we made the gap smaller by inserting a piece of soft iron. The top pole piece is 1'' above the disk and the bottom pole piece is 1/2'' below the disk.

Critique and Speculation

The end of the wire gets very hot after rubbing against the wheel, and it could inflict a pretty nasty burn. Surprisingly, though, we have had no problems with burns. (There is a warning sign, however...) This demonstrates an important principle about building exhibits: Don't create a problem where one doesn't exist! Try out new things before protecting people from themselves.

Because the end of the wire gets hot and sparks quite a bit, it wears down very fast. You will have to continually strip the wire as it burns away. This is only a minor maintenance headache if you have explainers or docents out on your museum floor to keep an eye on it.

Exploratorium Exhibit Graphics

Daisy Dyno

A MOTOR TURNS BECAUSE THE FIELD OF A MAGNET PUSHES AGAINST THE MAGNETIC FIELD PRODUCED BY AN ELECTRIC CURRENT.

To do and notice:

● Place the tip of the wire on the disc as shown. The disc should turn (you mave have to give it a little push to get it started.

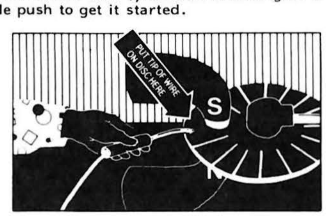

● Notice that the disc is divided into sections that radiate from the center like the petals of a daisy. Each time the disc turns, a new petal moves under the wire.

● Try putting the tip of the wire elsewhere on the disc – closer to the center or on another daisy petal. Notice that the disc slows down or stops.

What is going on:

The disc is a very simple motor. Like any motor, it converts the flow of an electric current to mechanical rotation.

When you touch the wire to the disc, you complete a circuit, a path through which an electric current can flow. A large current (35 amperes) flows from the wire, travels from the edge of the disc to the center, and returns to the battery. Even though the disc turns, the daisy-petal divisions ensure that the current always follows the same path, running from the edge of the disc along a fairly straight line to the center.

Any electric current produces a magnetic field. (To learn more about this, see CIRCLES OF MAGNETISM I, II, III, and IV.) The magnetic field of the current flowing through the disc pushes against the field of the permanent magnet and this push starts the disc turning.

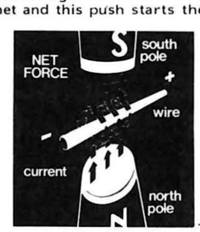

The petals of the "daisy" act like a flattened version of the wire in this diagram.

The extra surface area increases contact with the hand-held wire (which supplies the current).

Related Exploratorium Exhibits

Accelerated Motion

Avalanche; Balancing Stick; Bouncing Ball; Chaotic Pendulum; Downhill Race; Falling Feather; Gravity Well; Lunar Lander; Phase Pendulum; Reaction Time; Vortex; Tornado.

Electric Current

Giant Meter; Ohm's Law; Pacific Gas and Leather; Pedal Generator; Slow Motion Switch; AM Lightning; Corona Motor; Finger Tingler; Fluorescent Tube; Hand Battery; Induction; Shaded Pole Motor I & II; Tube Amplifier; Voltage Divider; Voltage Drop; AM Radio; Argon Candle; Electric Pendulum; Electric Analogy; Energy vs. Power; Hertz Resonator; Hot Effects; Pluses and Minuses; Giant Electroscope; Thermionic Emission; Very Slow Electric Oscillations; Iron Sparks.

Torque

Scaling; Differential; Model Differential; Downhill Race; Pendulum Table; Stripped Down Motor; Hysteresis Motor; Corona Motor; Lunar Lander; Vortex; Bicycle Legs; Chaotic Pendulum; Curie Point Motor; Balancing Stick.

Electric Fleas

Description

The visitor rubs the plastic top of this exhibit, giving it a charge. Small shavings below the plastic start jumping up and down between the plastic and the table top like a bunch of fleas.

Construction

Electric Fleas was a complete accident. One of our exhibit builders happened to be routing the edge of a formica table one day. The formica shavings flew all over the shop, some of them landing beneath a small sheet of Lexan nearby. Thinking the shavings were on top of the sheet (the majority were), someone tried to brush them off. The shavings beneath the plastic proceeded to jump up and down, and an electricity exhibit was born. One small table and one day later the accident was out on the museum floor.

As noted above, we simply mounted a 20'' square of Lexan in a 1-3/4'' thick frame and fastened the frame onto a Formica covered table. The Lexan is about 1'' above the table's surface. We continue to use the formica shavings as the ''fleas'', so we can't suggest any tried and true substitutes. We suspect that any light insulating material (plastic shavings, wood shavings, etc.) will work.

Related Exploratorium Exhibits

Charge Separation

Corona Motor; Electrostatic Generator I-III; Energy vs. Power; Finger Tingler; Hertz Resonator; Giant Electroscope; Slow Charge/Slow Discharge; Thermionic Emission; Tube Amplifier; Very Slow Electric Oscillations; Argon Candle.

Electric Polarization

Pluses and Minuses; Polaroid Projector.

Electric Fields and Forces

Electric Fish; Photoelectricity; Electroscope; Phototube; AM Lightning; Induction; Polaroid Sunglasses; Shaded Pole Motor I & II; AM Radio; Electric Pendulum.

Electric Induction

Tesla Coil; Fading Tone.

Exploratorium Exhibit Graphics

Electric Fleas

To do and notice

Rub the plastic cover vigorously with your hand and notice the dancing fleas. (Rub hard enough to warm the plastic to produce a good effect.)

What's going on

The fleas (bits of formica) start out electrically neutral. When you rub the surface of the plastic with your hand or a cloth, negative charges are transferred from your hand to the plastic. Since the plastic is a poor electrical conductor, these charges do not flow all over the surface but rather stay where they are put.

The negative charge on the plastic attracts the positive charges on the fleas to the top of the flea, and repells the negative charges on the fleas to the bottom, thus the fleas become polarized—positive on the top and negative on the bottom. Some of the fleas have a pointed end which faces the top and the charge concentrates there. The attraction between the charge concentrated on the top of the flea is then strong enough to lift this particular flea to the plastic.

When the flea actually touches the plastic, negative charges flow from the plastic to the flea, neutralizing the top of the flea, and the flea falls. However, since the flea was initially neutral, it now has an excess of negative charge. When the flea touches the wood on the bottom, it loses it charge slowly, and the process can begin again. Eventually the plastic surface is discharged completely and the process stops.

For the electric force to be strong enough to pull up the flea, the electric charges have to be concentrated to a small point on the flea. Some of the particles are positioned so that their points are directed straight up and these are the ones that jump.

Energy Versus Power

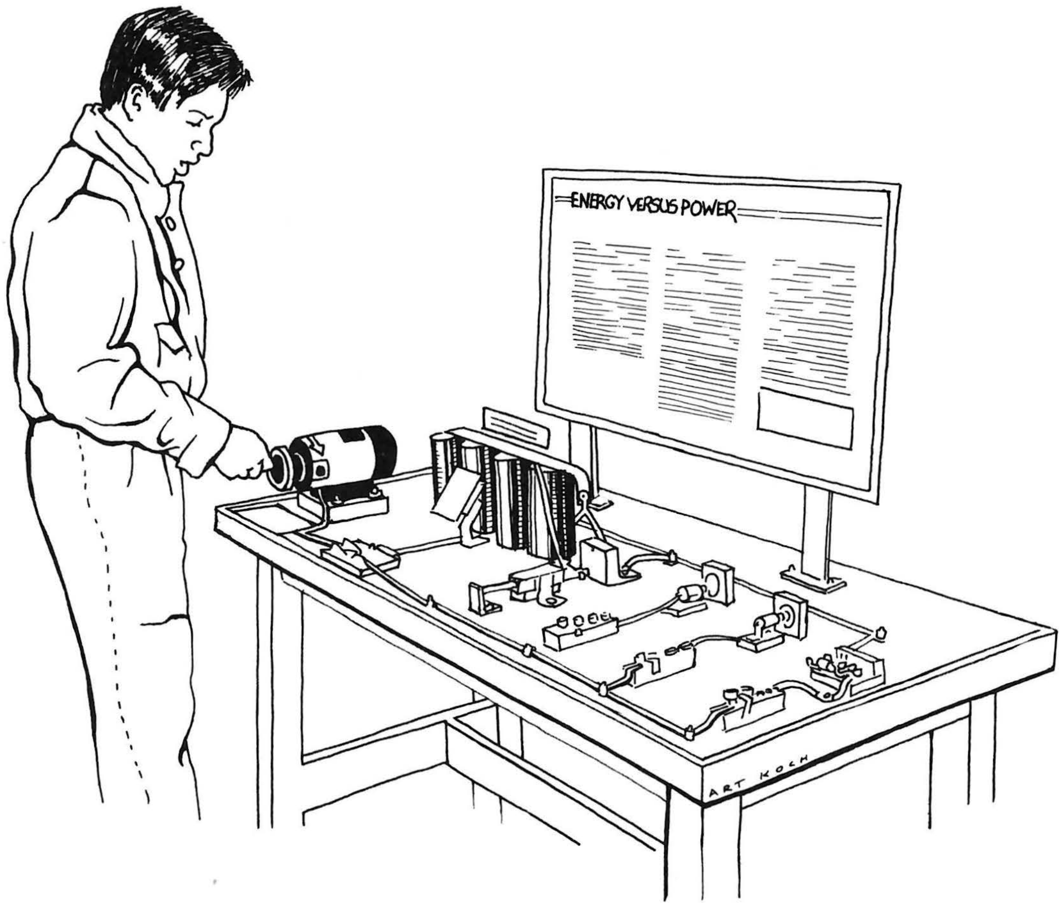

Description

The words "energy" and "power" tend to be interchangeable in everyday usage. Physicists, however, have very specific definitions for these words, and this exhibit demonstrates the difference between the two concepts. Energy is the ability to do work, while power is the rate at which work is done. The "work" here is the lighting of various lamps. A hand generator is used to charge a set of capacitors to a given voltage. The capacitors now hold a given amount of energy, which can be discharged through any of several different light bulbs that vary in resistance. The energy gets used up at different rates, depending on the different power ratings (wattage) of the bulbs.

Construction

This exhibit is laid out on top of a 4 x 3' formica covered table and presents a "visual schematic" to the visitors, as all the wiring is on the table top. Where possible, wires are made of brazing rod, which is fixed to the table top with cable hold-downs.

We use a permanent magnet motor as the generator to charge the capacitors. The motor we use is no longer manufactured, but the following specifications can be used to order a suitable substitute from your local motor supplier:

Permanent magnet, variable speed DC motor
90 volt
1.4 Amp
1/8 HP
1800 RPM

We have observed that with a 4" diameter crank rotated as fast as possible the motor generates about 20 volts open circuit.

The motor charges the capacitors through a SPST switch. This well-

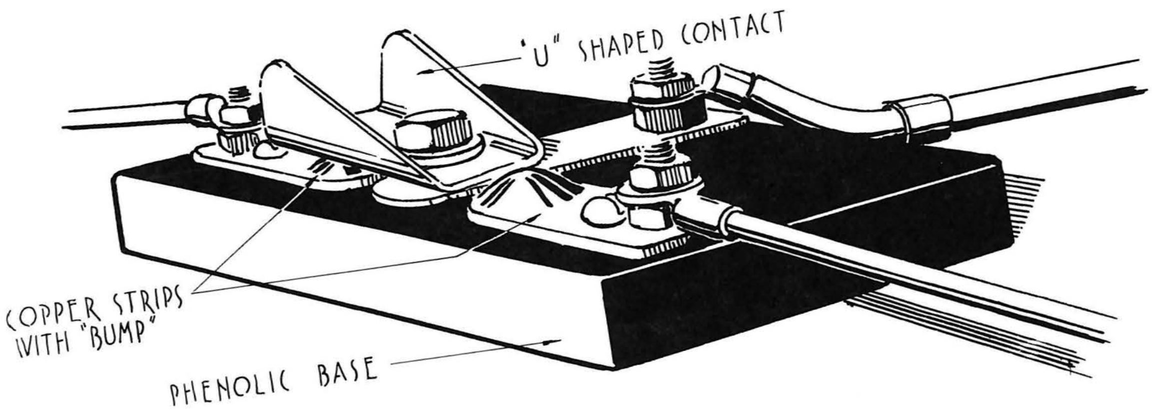

SPDT Switch Detail

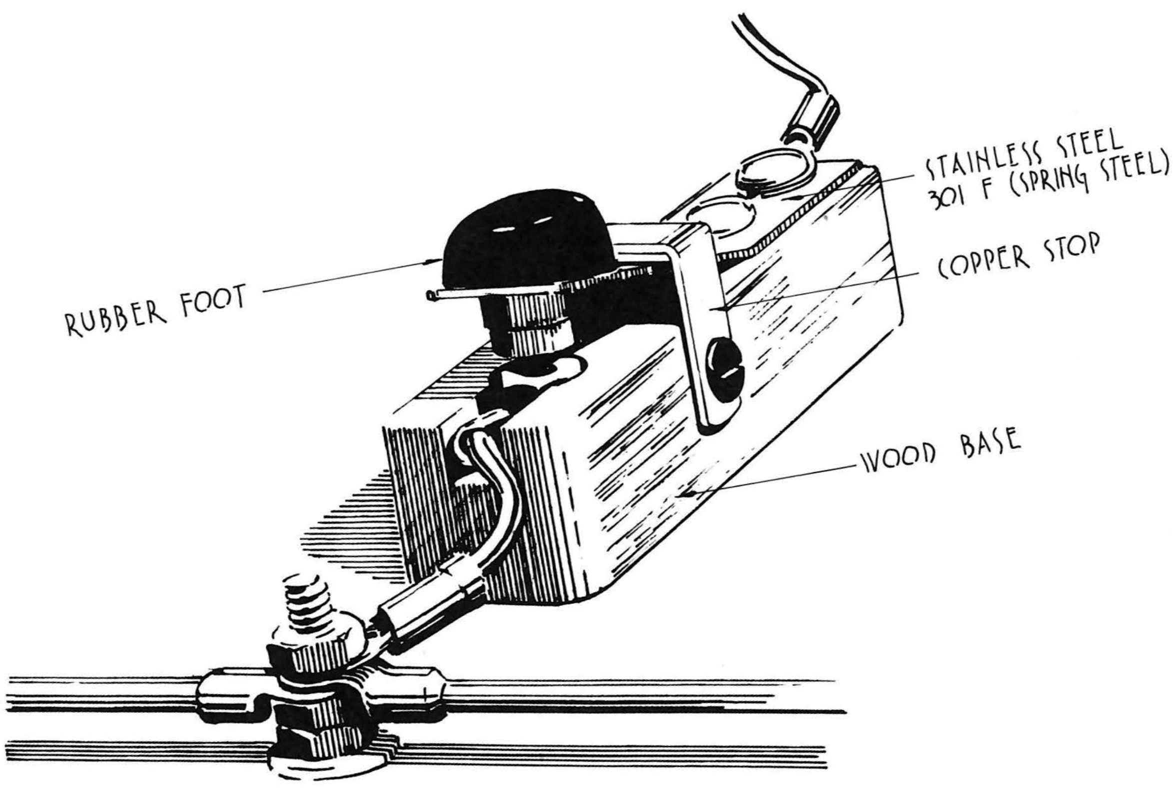

Key Switch/Table Wiring Detail

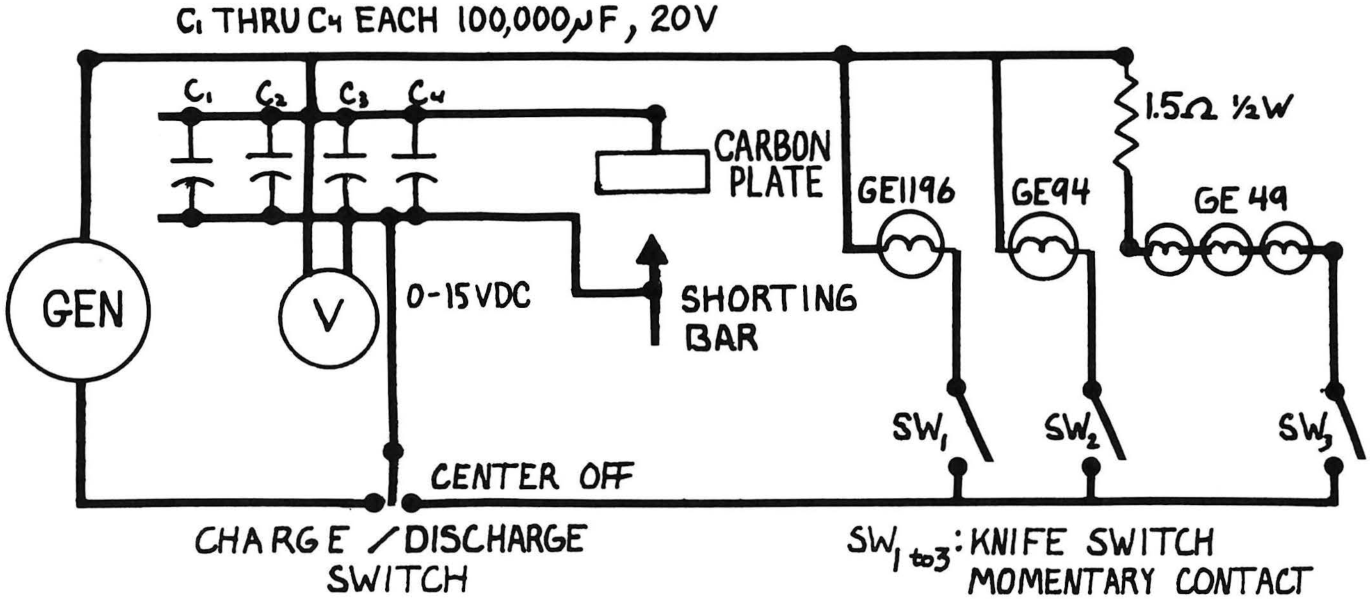

Exhibit Schematic

designed switch can be modified for use in many exhibits. It consists of copper strips bolted to a phenolic base. The contacts are 1/2'' raised bumps, which are made by forcing a ball bearing into a copper sheet with a press. The copper sheet is placed on an aluminum support with a conical hole drilled in it to hold the ball bearing. First the dent is made; the bearing is then removed, and the flat part of the press is used to re-flatten the copper around the bump. The center contact of the switch is a ''U'' shaped copper piece that pivots between the two raised bump-contacts. The ''U'' shaped contact is spring loaded on its bolt.

The ''capacitor'' is actually a bank of four separate 100,000 uF 20V capacitors bolted together in parallel with solid copper straps and fixed to the table top. A volt meter mounted in front of the capacitors gives the visitors an indication of how ''full'' the capacitors are.

The capacitors power one of four individual items: three different light bulbs or a shorting bar. The shorting bar is aluminum with a carbon contact sticking out one end. The rod is spring loaded to keep it away from its carbon block contact. Without the spring loading, the visitor could leave it shorted, frustrating further use of the exhibit.

The lamps were selected for their differing resistances. We've chosen the following types:

1) GE 1196
2) GE 94
3) Three GE 49 lamps in series with an additional 1.5 ohm resistor

Once the capacitors are charged and the switch is in the ''discharge'' position, the lamps can be individually switched on through a simple key switch (see diagram). These key-switches are reliable, self-explanatory, and non-threatening to the visitor.

Related Exploratorium Exhibits

Electric Resistance

Carbon Filament; Carbon Microphone; Bulbs & Batteries; Slow Motion Switch; Fading Tone; Ohm's Law; Finger Tingler; Hand Battery; Hot Effects; Voltage Drop; Induction; Slow Charge/Slow Discharge; Giant Electroscope.

ENERGY VERSUS POWER

You can use energy slowly or quickly. The rate of energy use is known as *power*.

To do and notice

- Swing the copper switch to *charge*, and turn the generator crank.
- The generator gives an electrical charge to four *capacitors*. The capacitors hold this charge, thereby storing the *energy* that you exerted by turning the crank.
- Notice the *meter*, which measures the voltage of the charged capacitors.
- When you have charged the capacitors as much as you can, swing the knife switch to *discharge*. Push and hold any one of the buttons on the right. The capacitors discharge through the light bulbs, making the bulbs glow.
- Notice that the energy of the capacitors is used up slowly by the small bulbs and quickly by the larger bulbs. You can use up the capacitors' energy almost instantly by pushing in the *shorting rod*.

What is going on

The capacitors store electrical *energy*, which they can release slowly or quickly. The rate at which they release energy is called *power*.

Charge up the capacitors to 10 volts. This represents a certain amount of electrical energy. You can drain this electrical energy very *quickly* with the shorting rod, thus delivering a very *large* amount of power. Or, you can send the energy through the small bulbs, which use this energy *slowly*, glowing for a long time and consuming very *little* power.

The "100-watt" rating of a light bulb is a measurement of its power consumption. A 100-watt light bulb uses five times as much power as a 20-watt light bulb. That is, it consumes energy five times *faster* than the 20-watt bulb does.

But when you pay your electric bill, you pay for electrical *energy*. This is found by multiplying the *power* you've used (measured in watts) by the length of time during which you've used it (measured in hours). This is expressed by the equation:

$$ENERGY = POWER \times TIME$$

Thus, a watt of power, when delivered continuously for one hour, yields an amount of energy called one *watt-hour*. A *kilowatt-hour* (one thousand watt-hours) is sold by the local electric company for about six cents.

The kilowatt-hour is a measurement of energy, just as the calorie is. In fact, one kilowatt-hour equals exactly 860 calories. This is about the amount of food energy stored in six ounces of milk chocolate. You can share six ounces of chocolate with many friends and eat it up very quickly (creating a great deal of power), or else you can eat a tiny bit of it every day for a long time (creating very little power). However, the same amount of *energy*—860 calories, or one kilowatt-hour—is released in either case.

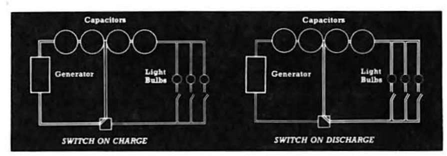

Recipe No. 143

Finger Tingler (Mild Electric Shock)

Description

Electricity is generally invisible, inaudible, tasteless, and odorless. We normally have no way of sensing its presence except with some kind of instrument. This exhibit allows the visitor to experience the flow of electricity directly as well as through the visual indication of a meter. We hope that this experience helps people appreciate the actual phenomenon that the meters here and elsewhere can only indicate. (In the exhibit builder's words, ''Hey, I know how that current meter feels. Man, I been there!'')

The visitor turns the crank on a generator and receives a mild electric shock. Since the generator is hand cranked, the shock received is only as large as the person wishes. Two meters indicate voltage and current. The visitor can plainly see that voltage can be present without current by cranking the generator and not touching the contacts (current = tingling).

People's direct experience of electricity is usually unpleasant and scary—an unexpected shock from a wall socket or improperly grounded appliance. Brief encounters with electric current are generally not harmful unless they trigger a fibrillation in the heart. When people using this exhibit feel the slight current running from one finger to the next, they see that small amounts of electricity won't kill them.

Construction

We built this exhibit out of an old war surplus telephone ringing generator. Here are the numbers on the generator:

Generator, Ringing, Hand G-42A/PT
Kellogg Switchboard and Supply Co. (a div. of IT&T)

These are available at almost all surplus stores and through many surplus catalogs. We mounted the generator vertically and replaced the normal crank handle with a nylon handle with a finger hole. This makes it very easy to crank with one finger (see exhibit graphics).

Wires from the generator run along the table top (SHOW THOSE WIRES!!) to a voltage meter, an ammeter, and finally to the finger contacts (see wiring diagram). The volt-meter reads 0 to 25 volts and the ammeter reads 0 to 1 milliamp. Because the generator can produce quite a kick it is current limited with a 100k ohm resistor to about ½ milliamp (500 microamps). After some consultation with testing laboratories, we feel that ½ milliamp is a safe current for public exposure. Under no circumstances should you allow visitors an exposure to current above (or even near) 5 milliamps. At this current they will experience difficulty in releasing the electrodes (a good reason for a self-cranked generator), as well as intense pain.

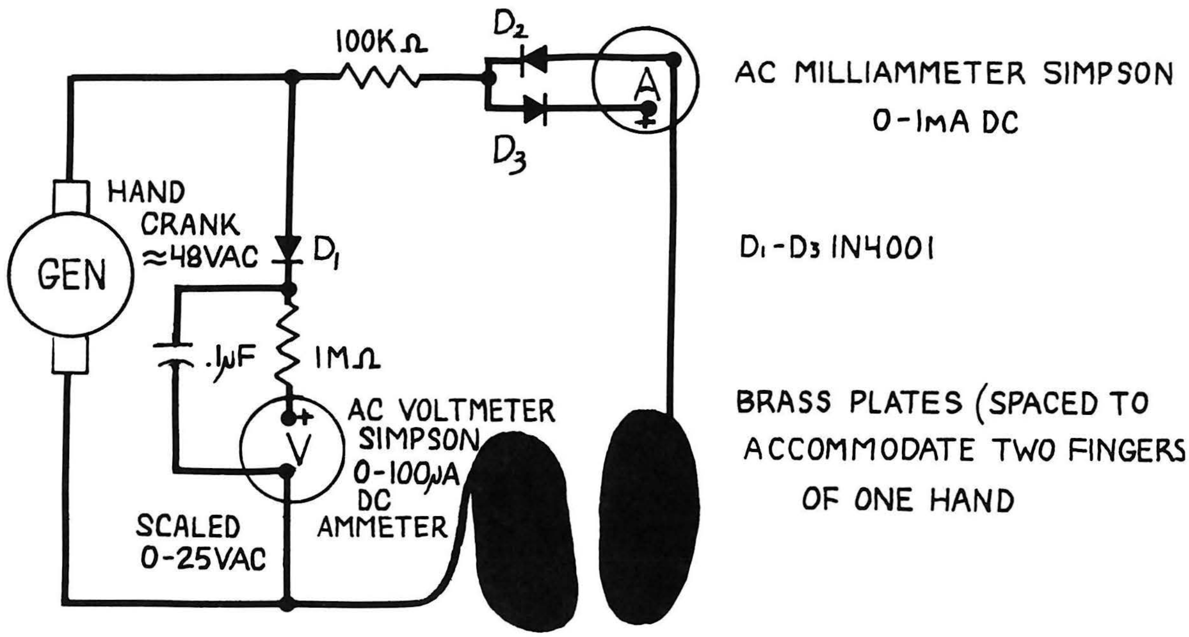

The brass finger contacts measure about 1 x 3'' and are glued to the formica surface of the exhibit. The brass strips are supposed to look like two fingers from the same hand. Note that people should be guided by the exhibit graphics and finger contacts to use two adjacent fingers from one hand. If fingers from two hands were used, current would flow across the body (and heart). We don't think that this presents any danger at ½ milliamp, but it's a precaution that we recommend.

Related Exploratorium Exhibits

Electric Shock
Giant Electroscope; Photoelectricity; Electroscope.

Electric Circuits & Resistance
Bulbs & Batteries; Capacitor Discharge; Hand Battery; Slow Motion Switch; Carbon Microphone.

Electric Current
Pedal Generator; Pluses and Minuses; Sphere Gap; Two Plates; DC Motor-Generator; Series and Parallel Circuits.

Finger Tingler

MILD ELECTRIC SHOCK

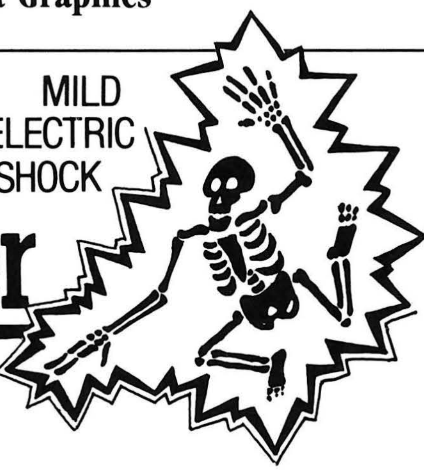

To do and notice:

- Place two fingers from one hand on the brass plates while turning the generator with a finger.
- Does anything happen if you only touch one plate at a time?
- Wet your fingers and try again.

What's going on:

The severity of an electric shock depends on the amount of current flowing through your body. The current in turn depends on both the voltage and your resistance. Your body has a low resistance to the flow of electricity except for your skin. Moist skin has a lower resistance than dry skin; thus the same voltage will give you a bigger shock if you wet your fingertips. You can also lower your resistance by pressing more skin into contact with the plates.

The electric current needs a place to flow in as well as a place to flow out. Therefore you have to touch both plates at once to get a shock. Birds perched on power lines are safe from shock as long as they don't contact two lines simultaneously.

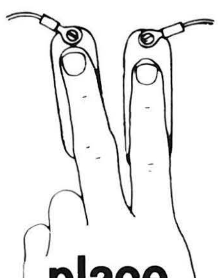

place fingers here ►

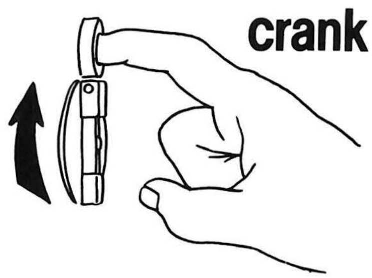

turn crank

Recipe No. 144

Giant Meter

Description

This exhibit shows how an electrical meter works. The visitor can adjust a rheostat that varies the amount of current flowing through the coils of the meter. As the current increases, so does the magnetic field and, consequently, the deflection of the needle. This meter is big enough for all of its components to be easily seen.

Construction

A "normal" meter has a fixed permanent magnet and a moving coil. To make this exhibit easier to build, we've taken the liberty of interchanging the two and use a fixed coil and moving magnet. The result is the same.

The needle of the meter has a "cow magnet"* that swivels on an aluminum pivot, which is mounted to the baseboard. The pivot must be as free from friction as possible—ours has ball bearings on its shaft. When there is no current flowing in the electromagnet coils, the meter needle should be centered. Springs attached to an arm screwed to the pivot accomplish this task (see diagram). You will have to play with the strength

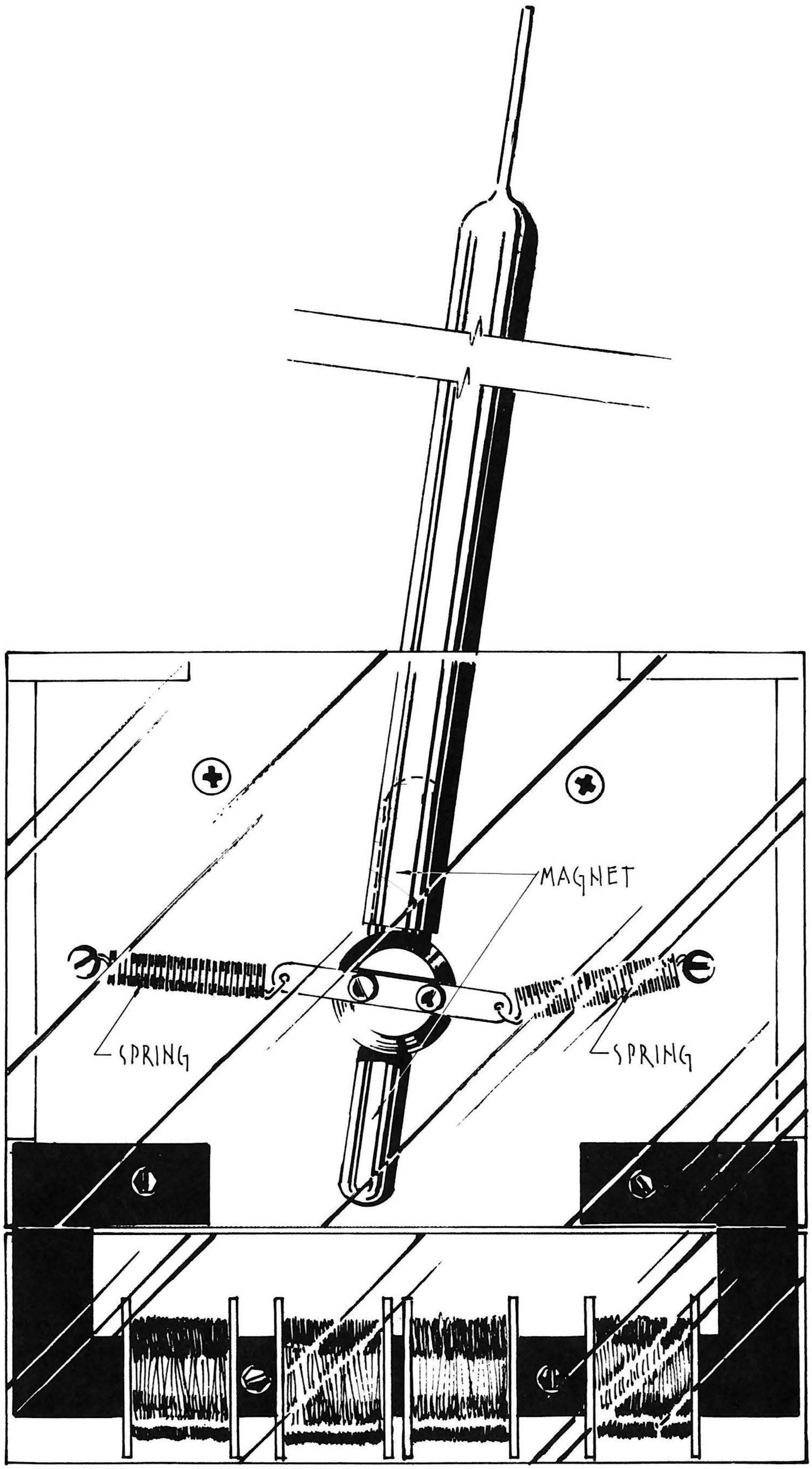
MAGNET
SPRING
SPRING
ELECTROMAGNETIC COILS

and stretch of the springs for the proper deflection.

Our meter needle is 12'' long. It is made from thin wall aluminum tubing fixed over the upper end of the cow magnet. We've squashed the tubing flat at the end to make an ''accurate'' reading needle (unnecessary, but it looks nice).

The coils for the electromagnet are wound on 4 separate spools with 5/8'' square holes through their centers. These plastic spools were surplus and we therefore have no source for them. You might look to your local electronics distributer or transformer manufacturer for them. You could also make your own, but be sure not to use magnetic material. These spools fit over the 5/8'' square steel pole pieces.

The four coils are wired in series so that their magnetic fields add to each other. Each coil has a resistance of 3 ohms—about 275 turns of 26 gauge enameled copper wire—for a total resistance of about 12 ohms. The coils are powered by a bipolar 12 volt power supply. 12 volts into 12 ohms yields a maximum current of about 1 amp. All of these values were chosen empirically to obtain reasonable interaction with the cow magnet without overheating the coils. The magnetic field produced by the coils is proportional to the number of turns and the amount of current in them.

To vary the current flowing to the coils, we use a giant rheostat (with a big knob since it's hard to turn). This rheostat has a resistance of 50 ohms and a maximum current rating of 2.5 amps. It is hooked up as shown in the schematic so that current can flow either way in the coils, deflecting the needle in either direction.

The coils fit over a ''C'' shaped pole piece made from 5/8'' square mild steel. One end of the ''C'' is screwed in place, allowing the coils to slide on and off.

Note in the diagram where the needle is mounted relative to the ends of the electromagnet pole piece. To maximize the torque on the needle, place the bottom end of the cow magnet directly between the poles.

The pivot and electromagnet are protected with a plexiglas cover (the springs are critically adjusted and the coils get hot). An additional horseshoe magnet (another cow magnet is best) hangs from a steel cable on the side of the exhibit so that visitors may experiment further.

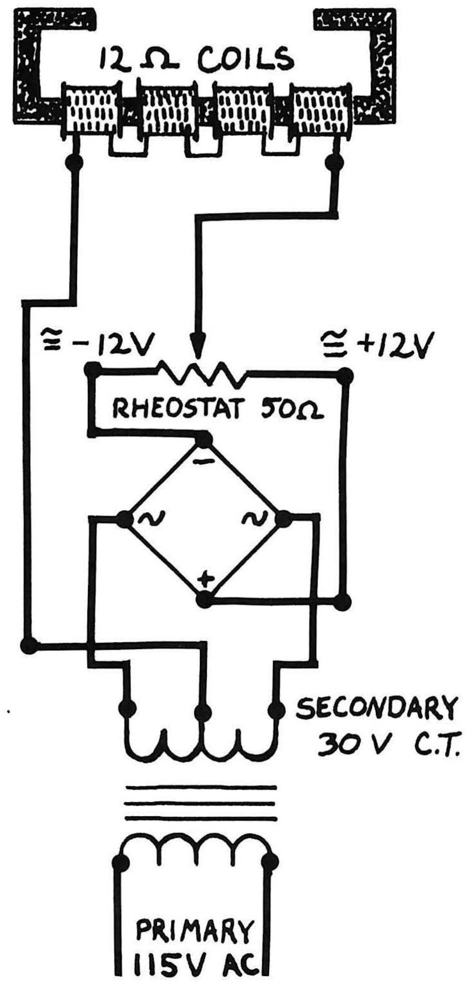

*Cow magnets—These are very good ''alnico'' magnets placed in the first stomach of a cow to keep nails, barbed wire, and staples that the cow might eat from entering its digestive tract and causing ''hardware disease''—a sometimes fatal condition. Fortunately for us these very strong and relatively cheap magnets can be used in many exhibits. These and just about any kind of magnet you can dream up are available from:

Dowling Miner Magnetics Corp.
21707 Eighth Street East
Sonoma, CA 95476
telephone: (707) 935-0352, or in California (800) 535-4471

Dowling is also a good source for magnets that you can sell in your museum shop, and even has an educational magnet kit available.

Exploratorium Exhibit Graphics

GIANT METER

Like most meters,
this Giant Meter uses magnetism
to measure electrical current.

To do and notice:

Turn the black knob. This knob controls an electric current, which flows through the wire coils.

Watch the meter needle. This needle shows the strength and the direction (+ or -) of the current through the coils.

What is going on:

An electrical current passes through the wire coils to produce a magnetic field. This magnetic field pulls the meter needle (which is a permanent magnet) to one side. The greater the current, the greater the magnetic pull on the needle.

When you change the current's direction with the black knob, the magnetic field's direction changes too. The meter needle is now pulled to the other side.

When the knob is at zero, no current flows through the coils and so the coils have no magnetic field.

So what:

The world is full of things beyond the grasp of our ordinary senses. To find out about such things, we must set up situations in which they produce effects we can sense. This meter, for instance, shows the invisible flow of electricity by means of the visible position of the needle.

Related Exploratorium Exhibits

Magnetic Fields & Forces

Magnetic Tribbles; Stripped Down Motor; Magnetic Line of Force; Magnetic Suction; Strange Attractor; Daisy Wheel Dyno; Sand Sorter; Visible Magnetic Domains; Curie Point; Magnetic Light Sorter; Air Track; Shaded Pole Motor I & II; Black Sand; Magnetic Tightrope.

Glow Discharge

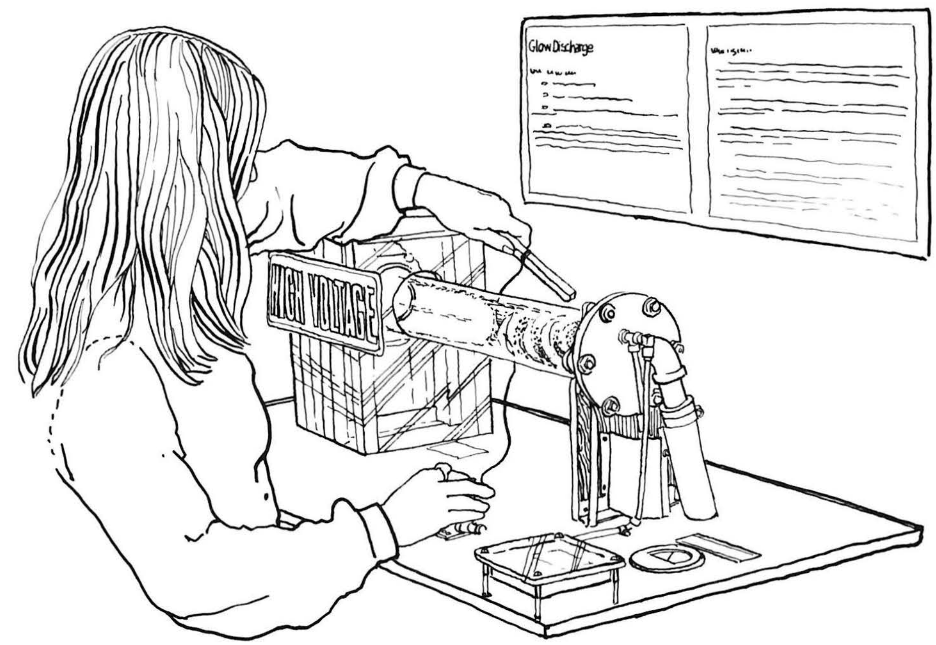

Description

Glow Discharge demonstrates electrical effects in a low pressure gas (in this case air). The visitor can vary the voltage and air pressure in a large cylindrical tube. If air fills the tube to near-atmospheric pressure, it does not glow at all. As the vacuum pump reduces the pressure in the tube, it begins to glow pinkish-orange. Then, as the pressure further decreases, the glow breaks up into light and dark spaces (Crooke's dark spaces). Next, the orange glow disappears entirely, leaving behind a blue violet glow, which gradually gets dimmer until the tube is once again dark, this time at a low pressure.

A magnet hangs from the exhibit which allows the visitor to see that moving charges can be deflected by a magnetic field.

Meters indicate the air pressure and current flow in the tube.

Construction

This exhibit requires some technical experience and some fooling around. Although it's moderately difficult to build, ours was originally developed by two high school students (under Dr. Oppenheimer's direction), and we think it can be duplicated without too much grief. The glass tube is a 3'' diameter 24'' long section of Corning PYREX ''Process Pipe''. We use the ''conical system'' pipe, which has conical flanges at both ends. This pipe and the proper inserts and clamping flanges make up the main hardware of this exhibit. Here are the catalog numbers of the components we use in our system:

Pipe: 3'' dia. 24'' length #72-7290
Flange-Style 1: 13'' dia. #72-9063
Insert: 3'' #72-9815

You may want to write Corning or a local distributor for a catalog of your own in case you want to build a different size exhibit.

The flanges are bolted to aluminum end plates (3/4'' thick and 6'' in diameter) with six bolts; Corning recommends using aluminum nuts and bolts. The ends of the glass flange have a groove that we use to hold an O-ring seal (although the grooves were not specifically designed for O-rings, and Corning sells the proper gasket for them). Make sure that there are no metal-to-glass contact points. The O-ring is clamped between the glass and the end plates. The anode end plate is blind drilled and tapped

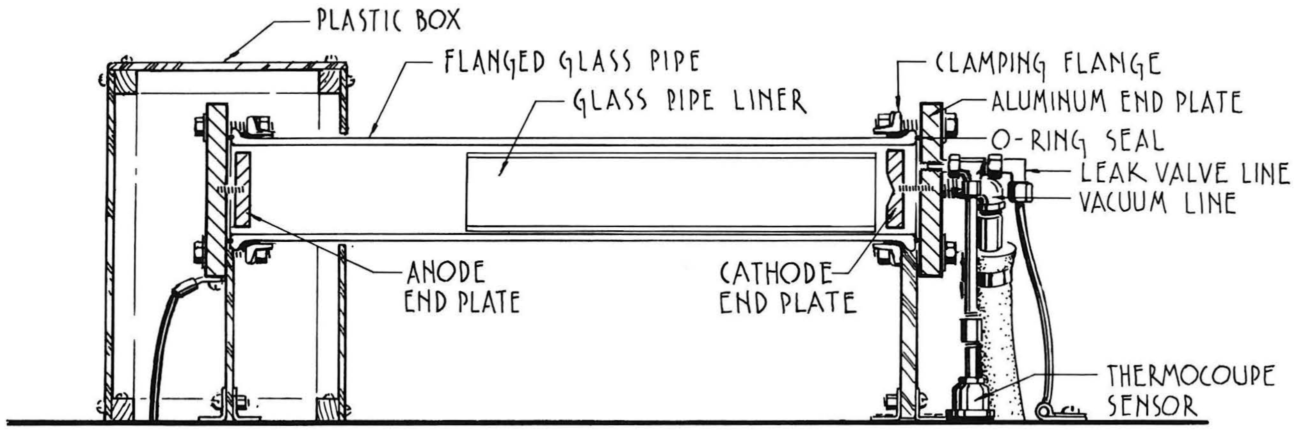

to accept the aluminum anode plate. The cathode end of the tube is also blind drilled and tapped for the cathode plate; in addition, it is drilled through and tapped to accept pipe fittings to the vacuum pump (3/4'' pipe) and leak valve (1/8'' pipe). Both anode and cathode plates should be made of aluminum, as this reduces problems with metal sputtering on the inside of the glass tube. (Stainless steel is also acceptable albeit harder to machine.) We used to use copper electrodes which sputtered onto the glass tube, resulting in a continuous cleaning headache. Both cathode and anode plates can be flat, but we've dished our cathode plate, producing an interesting focusing effect. The entire tube assembly is suspended above the table to provide access all around.

IMPORTANT!!! Since the anode end of the tube is at a very high voltage, we have enclosed it in a protective plastic box which completely surrounds the end of the tube, the clamping flange, and the tube support, right down to the table top. The box has a large ''High Voltage'' sign prominently posted in front.

The power supply must be a high enough voltage to start the current and there must be enough current to keep the discharge going. It must also provide DC. Ours is a simple supply (see schematic) consisting of a 20,000 volt transformer, a high voltage diode, capacitor, and current limiting resistor. We also put a resistor across the capacitor to drain it when the power is shut down. A current meter in series with the tube gives the visitor an indication of the current flowing in the tube, which varies up to about 150 milliamps with ours. One important aspect of this power supply is that it is current limited (because of the series resistor). When the tube is glowing it is, for all intents and purposes, a dead short. If you have trouble finding a transformer, you might try a neon sign shop; neon sign transformers are self current regulating. To allow the visitor to vary the voltage, our main transformer is plugged into a variac that the visitor can adjust with a knob on the table top.

We use a standard Sargent-Welch 1402B-01 vacuum pump to evacuate the tube. The pump system should be able to reach 1 micron of vacuum. We recommend you put an oil trap on the pump exhaust to keep oil vapor from escaping into your environment. This vapor not only gets things dirty and greasy, but people always mistake it for smoke and think that the exhibit is about to burst into flames. (The vapor probably isn't too healthy to breathe, either.) We also recommend that the exhibit be shut off at night; if you do this, you should install a solenoid activated valve to vent the

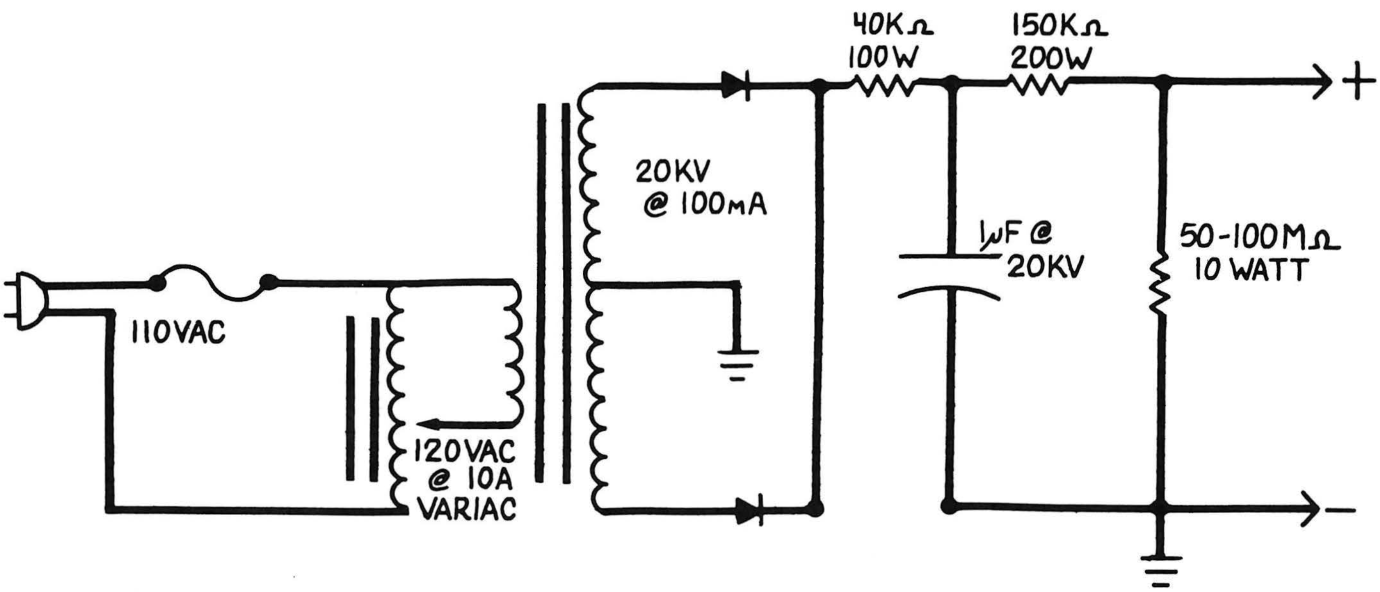

system to atmosphere when the exhibit loses power—if the tube is held at a high vacuum for extended periods, oil vapor from the pump can make its way back up the vacuum line to the tube. The leak valve is a standard toggle valve (not a knob). The atmospheric side of the valve is plugged to allow only a small amount of air to leak in—just enough to bring the tube to sufficient pressure to stop the discharge; the pump rate should remain greater than the leak rate, so that the public cannot bring the tube up to atmosphere. This is very hard on the vacuum pump and reduces the life of the pump oil. The valve springs closed when released, allowing the pump to evacuate the tube. We have put a slotted guide over the toggle to limit its travel and keep it from rotating. Toggle valves are made by several companies including Hoke and Whitey; we use a small Hoke valve, which has held up for years.

The pressure in the tube is measured with a thermocouple gauge, with the thermocouple sensor located at the exhaust port of the tube. The meter readout sits on the table top near the current meter, so it's easy to keep an eye on both at the same time.

A strong ceramic magnet wrapped in tape is steel-cabled to the table top. The stronger the magnet, the more deflection can be seen.

The exhibit must be placed in a dark area, as the discharge is fairly dim. This means that you will have to take some care in lighting the exhibit graphics.

Critique and Speculation

This exhibit has proved to be extremely reliable. It would be nice to have a volt meter in addition to the ammeter, so that students could get some indication of the acceleration of the electrons in the tube, and so be able to do some quantitative experimentation when the Crooke's dark spaces are visible. For such quantitative work, the vacuum gauge would have to be accurately calibrated.

Related Exploratorium Exhibits

Electrical Flow Through Gases

Kinetic Light Sculpture; Tesla Coil; Lumen Illusion; Spark Chamber; Fluorescent Tube; Slow Motion Switch; Spectra; AM Lightning; Argon Candle; Hertz Resonator; Iron Sparks.

Electromagnetic Forces

Black & White TV & Magnetism; Black Sand; Circles of Magnetism I-IV; Demagnetizer; Bulbs & Batteries; Slow Motion Switch; Earpiece; Earth's Magnetic Field.

Electromagnetic Radiation, Visible

Hot Spot; Magnetic Light Sorter; Rainbow Encounters; Fluorescent Rods; Electromagnetic Spectrum; Sun Painting; Carbon Filament; Color Removal; Heat Rays & Light Rays; Solar Signature; Glow Wheel; Light Island; Low Frequency Light; Polaroid Projector; Hot Light.

Glow Discharge

This electrical glow is related to St. Elmo's Fire, which radiates from ships' masts on stormy nights, and to the Northern Lights, or aurora borealis. It also appears in neon signs and fluorescent light fixtures.

To do and notice

Turn the current knob all the way up (clockwise).

A vacuum pump has removed most of the air from the glass tube. Push the AIR LEAK valve gently to the left, and hold it there. This allows air back into the tube. Glowing colors appear and vanish as the pressure grows.

Release the AIR LEAK valve and watch the glow develop as air is gradually pumped out of the tube again. By carefully regulating the valve, you can maintain the pressure at any level you like. The PRESSURE METER on the far right shows the air pressure within the tube.

When most of the air has been pumped out, a bluish cone radiates out from the the negative end of the tube. This cone is a beam of rapidly moving electrons. By holding the magnet near the cone, you can bend it and make it strike the glass tube.

What's going on

The colorful light in the tube is caused by gas molecules interacting in a high-voltage electric field.

The glass tube has had most of the air pumped out of it. A high-voltage power supply sends a positive charge to the electrode on the left end of the tube and a negative charge to the electrode at the right end.

This powerful electric field tears some of the air molecules apart into positively and negatively charged fragments. The positive fragments (large ions) are attracted to the negative end, and the negative fragments (electrons) are attracted to the positve end.

As these fragments are pulled across the tube, they gain speed and strike other molecules. Sometimes they break the other molecules apart in a kind of avalanche. At other times, they just give their energy to the molecules, which re-emit it as colored light.

If there is too much air in the tube, the ions and electrons bump into gas molecules before they have a chance to gain speed. They never get enough energy to break the molecules apart, and so there is no glow.

But if there is too little air in the tube, there aren't enough molecules to interact and glow. The electrons travel freely through the empty tube and strike the glass walls, giving off a faint blue-green fluorescence. This electron beam spreads out into a cone because the negative electrons repel each other as they fly outwards.

Magnetic fields and electric charges are closely related. When you hold the magnet near the tube, the magnet's field deflects the charged electrons as they shoot by, bending their course.

So what

The glow discharge—a colorful glow produced by electrified gases—was first discovered in the late 1800's. The blue cathode ray (which radiates from the negative end, or cathode) was particularly mysterious; no one knew whether these rays were made of matter or of some sort of wave. In 1897, J. J. Thomson showed that the rays are really made of tiny negatively charged particles, which he called electrons. In 1896, Wilhelm Roentgen used a glow discharge tube to discover the penetrating radiation called X Rays.

The glow discharge tube is an important research tool. It has helped us discover the structure of molecules and the ways that molecules interact and give off light.

Glow discharges also create the familiar light of neon signs and fluorescent fixtures.

Induction

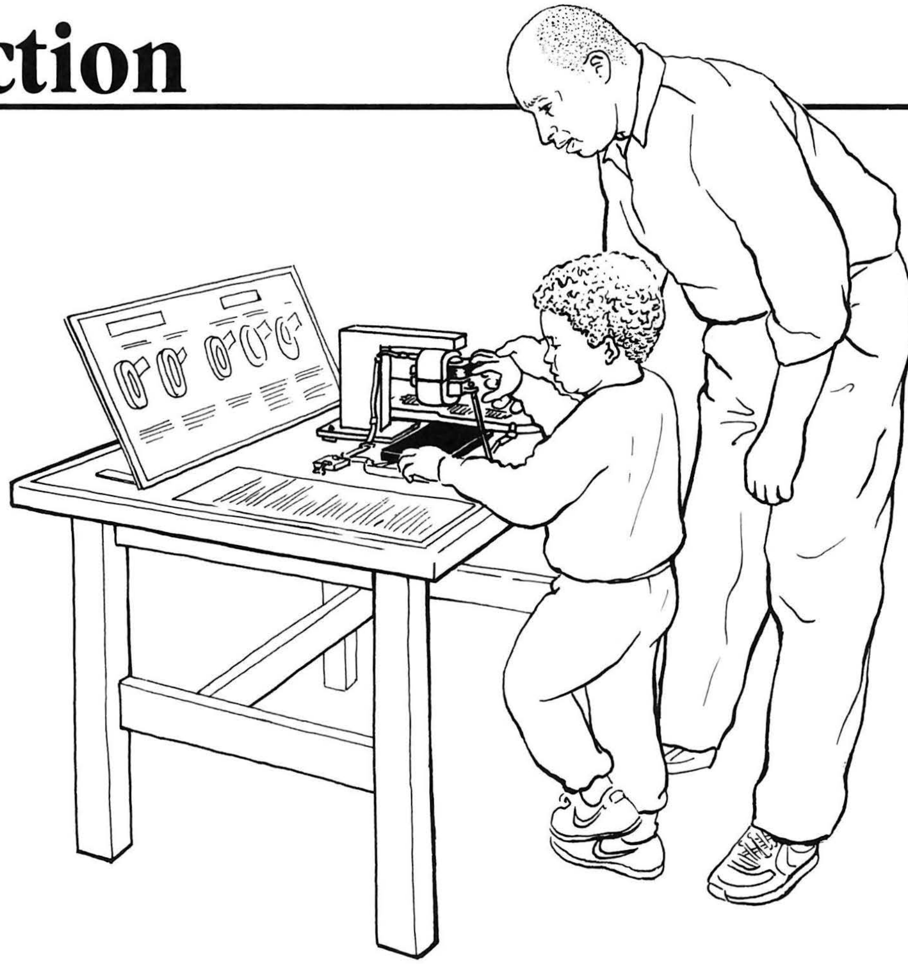

Description

This exhibit demonstrates induction by showing that the system can maintain a magnetic field after the current is turned off. Two horseshoes are placed together, one over the other, and a coil around the top one is energized with current. This top horseshoe becomes an electromagnet and attracts the lower horseshoe. When the current is shut off, the lower horseshoe drops immediately. If, however, a secondary coil is placed on the lower horseshoe, the dying magnetic field of the primary creates a strong current in the secondary, which makes the lower horseshoe into an electromagnet. Both horseshoes stick together until the energy in the secondary coil dissipates as heat, at which time the bottom horseshoe drops.

Construction

Essentially, all you need for this exhibit are the laminated steel horseshoes, the support structure, the secondary windings, and the power supply.

The laminated steel (transformer steel) cores we use were originally made specially for a mercury pump (that never got built). They measure 3'' across the ''C'', 2'' wide and 2'' deep. The pole pieces and body are 3/4'' thick. Our laminations tend to separate, so we keep them together with bolts through the bases (through which we mount them as well) and brass strips around the ends of the pole pieces. The brass strips are pieces of shim-stock 3/4'' wide, with the ends soldered together. Since the function of these bands is to keep the laminations together, be sure they're fastened tight. To keep the bands from acting as windings themselves, 1/8'' wide slots were milled almost completely across them, leaving enough on the edges for structural integrity. The top horseshoe has a primary winding of about 175 turns (18 gage wire) around one of the poles. This winding is potted in epoxy and fixed in place on the horseshoe, with the wire leads extending from the back.

Our welded aluminum support structure is pictured in the diagram (though there are certainly other ways to build such a frame). A hinge

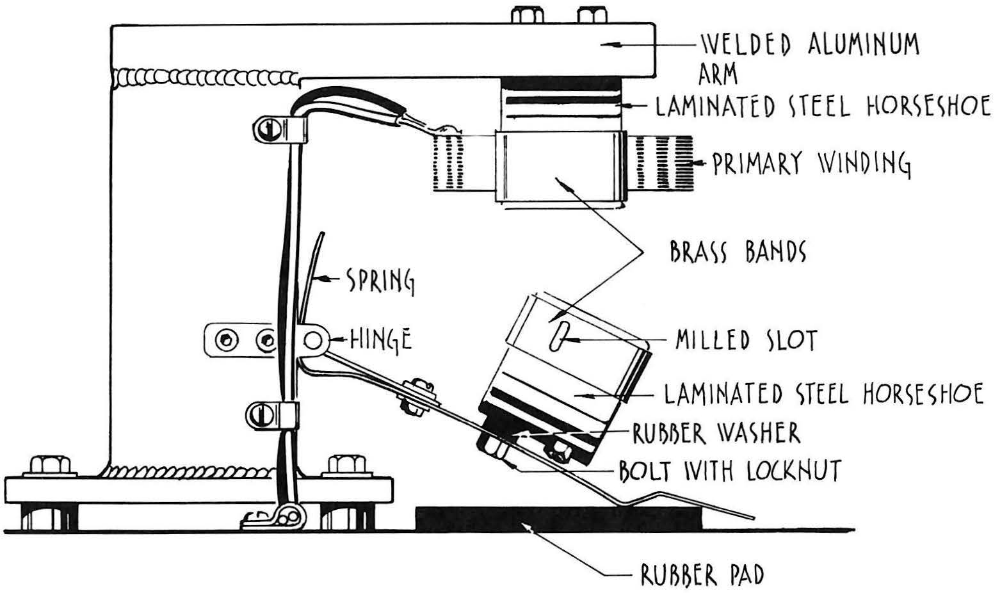

Coil Assembly

mechanism holds a stainless steel plate, on which the lower horseshoe is held with a single bolt (with locknut), with a 3/8'' thick, 3/4'' diameter rubber washer to separate them. This rubber washer provides flexibility for the lower horseshoe to align with the upper horseshoe and seat properly. The lower horseshoe has two additional bolts running through the same side as the mounting bolt, which help to hold the laminations together. We've fastened a thick rubber pad to the table beneath the lower horseshoe assembly, to cushion the horseshoe when it drops.

Two secondary coils are provided. One is similar to the primary coil and consists of about 100 turns of 18 gage wire which is potted in epoxy resin. Be sure to connect the ends of the wires to short the coil before you pot it or it won't work (the circuit must be closed). The other secondary ''coil'' is simply a block of aluminum machined with a hole to fit over the pole on the lower horseshoe. This aluminum donut is 3/4'' thick, with the hole 1/2'' wide. The aluminum secondary is attached to the table with a 1/16'' steel cable; the potted coil is not attached. Both secondaries are kept in a designated rubber matted area on the table top. Note that it is nice to make the secondary coils such that the visitor can put both on the lower horseshoe at once, one on each pole—and discover that the lower horseshoe will then hold even longer when the current is turned off.

The primary coil is hooked to the power supply through a telegraph style leaf switch (see diagram) which the visitor presses to activate the exhibit. The D.C. power supply provides about 7 amps at 5 volts (open circuit) to the primary coil (so the primary coil has a resistance of about 0.7 ohms). The wiring of this exhibit is completely exposed on top of the table, up to the power supply, which is a terminal block with a schematic symbol of a battery on it. The power supply is mounted below the table.

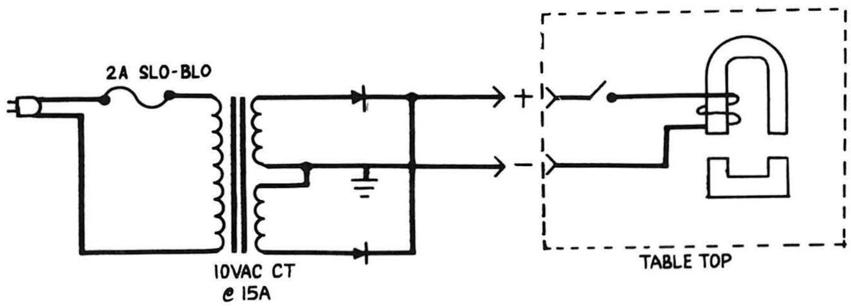

Power Supply Schematic

Related Exploratorium Exhibits

Electric Conduction

Carbon Filament; Carbon Microphone; Electroscope; AM Lightning; Finger Tingler; Hand Battery; Shaded Pole Motor I & II; Hot Effects; Giant Electroscope; Thermionic Emission; Slow Charge/Slow Discharge.

Electric Current

Daisy Wheel Dyno; Giant Meter; Ohm's Law; Pacific Gas & Leather; Pedal Generator; Slow Motion Switch; Corona Motor; Finger Tingler; Fluorescent Tube; Tube Amplifier; Voltage Divider; Voltage Drop; AM Radio; Argon Candle; Electric Pendulum; Electric Analogy; Energy vs. Power; Hertz Resonator; Hot Effects; Pluses and Minuses; Iron Sparks.

Magnetically Induced Electric Fields

Generator Effect; Stripped Down Motor; Transformer; Pedal Generator; Ring Toss; Automotive Ignition; Eddy Currents; Hertz Resonator.

Exploratorium Exhibit Graphics

ELECTRICITY

Induction

To do and notice:

• If there is a coil or an aluminum ring around the lower iron horseshoe, take it off and put it aside.

• Using the metal lever, lift the lower horseshoe up against the upper one. Press and hold the switch. The lower horseshoe is pulled upwards by a magnetic force.

• Release the switch. The lower horseshoe falls down immediately.

• Now, fit either the wire coil or the aluminum ring onto the lower horseshoe. Lift the horseshoe again and press the switch. Release the switch, and the horseshoe stays up for a few seconds before falling.

What is going on:

Any current of electricity creates a magnetic field. When you press the switch, the battery sends an electrical current through the coil on the upper horseshoe. This current creates a magnetic field, which attracts the lower horseshoe. The coil thus acts as an electrical magnet, or electromagnet.

When you release the switch, the current through the upper coil stops abruptly. If there is no coil on the lower horseshoe, the magnetic field collapses as well, and the horseshoe falls.

However, a changing magnetic field creates a current in any nearby coil. (This effect is called induction.) When the lower coil is in place, the collapsing magnetic field from the upper coil creates a surge of current in this lower coil. The ends of the lower coil are joined together, making it an endless loop through which the induced current can run. This new current races around the closed loop, creating a magnetic field that makes the lower horseshoe into a magnet. The magnetized lower horseshoe continues to stick to the steel upper horseshoe for a few seconds.

The current in the lower coil is eventually dissipated by resistance in the coil, and so the horseshoe falls. If the lower coil had no electrical resistance, a current could run through it indefinitely, creating a permanent magnetic field.

The aluminum ring can also be thought of as an endless coil; but, while the wire coil has over a hundred turns, the aluminum 'coil' has only one.

Without Shorting Coil

switch closed **switch open**

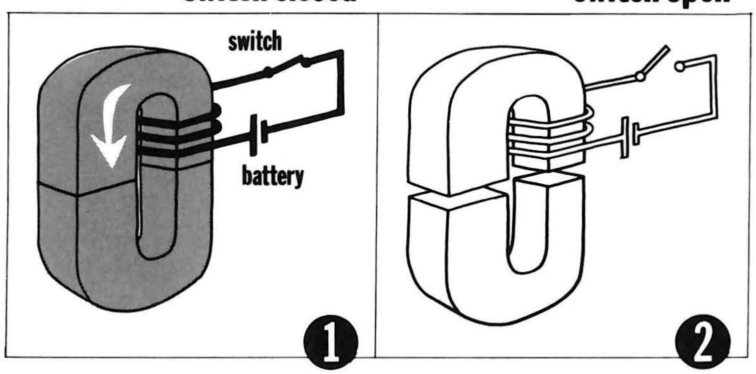

1 WHEN YOU PRESS THE SWITCH, current runs through the upper coil and creates a magnetic field. This field makes the upper horseshoe into a magnet, which attracts the lower iron horseshoe.

2 WHEN YOU RELEASE THE SWITCH, the circuit is broken, and current can no longer flow into the upper coil. When this current stops flowing, the magnetic field collapses quickly and the lower horseshoe drops.

With Shorting Coil

switch closed **switch open** **switch open**

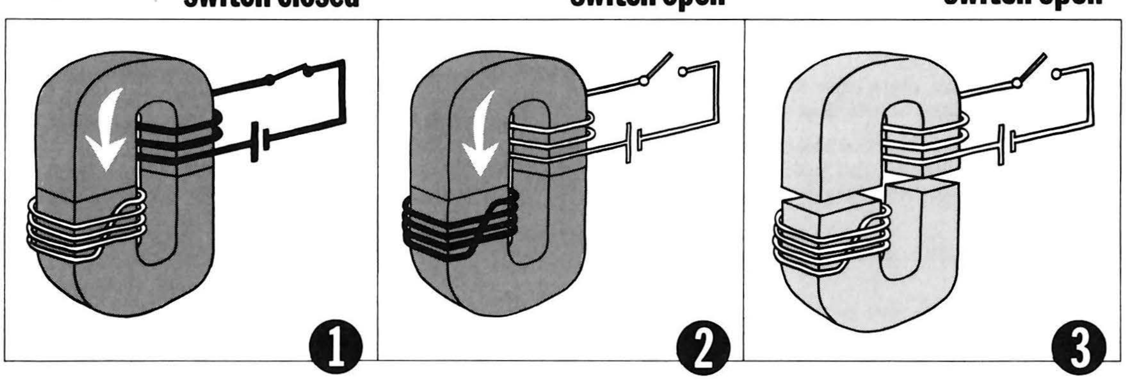

1 AFTER ADDING THE COIL to the lower horseshoe, you can again magnetize the upper horseshoe by pressing the switch. The lower horseshoe will be attracted.

2 WHEN YOU RELEASE THE SWITCH, the collapsing magnetic field induces a new current in the continuous lower coil (changing magnetic fields induce current in wires). This induced current circulates around and around the lower coil, making the lower horseshoe into a magnet (a current creates a magnetic field around it). The magnetized lower horseshoe continues to stick to the upper horseshoe.

3 AFTER A FEW SECONDS, the induced current is dissipated by the coil's resistance. The magnetic field is no longer strong enough to hold up the lower horseshoe, and it drops.

Recipe No. 147

Magnetic Suction

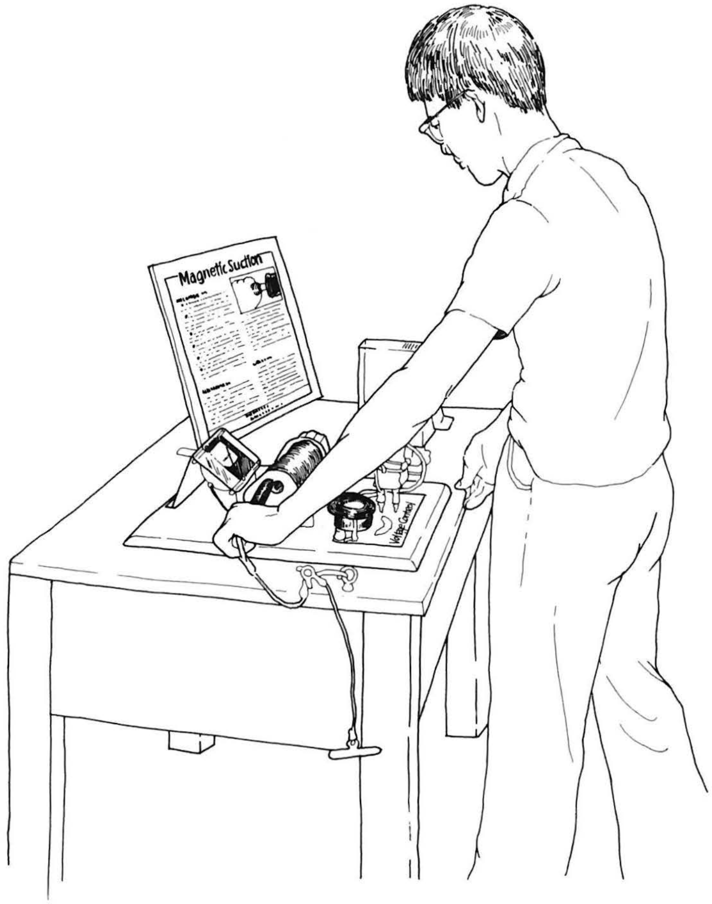

Description

A large coil and variable power supply are the main components of this exhibit, which demonstrates how a solenoid works. The coil terminates in a big plug which can be connected with the current running in either direction. A large steel rod can be inserted into the coil; a magnet and a compass are also on hand for further exploration of the magnetic field surrounding the solenoid.

Two familiar applications of this device—a doorbell and a pinball machine flipper—are attached to the table top and are button operated.

Construction

The main coil is wound on a phenolic spool, made in-house, that is bolted to the table (the spool's disk ends have been flattened at the bottom for stability). The center of the spool has a 5/8'' inside diameter and the spool is 7-1/2'' long. Our coil has about 300 turns (I have to admit I didn't actually count them) of 12 gauge lacquered copper wire. The coil terminals are connected with flexible multi-strand wire to the terminal plug. This is a large banana-type plug with 1/4'' diameter split copper pins; on the table top is a matching split copper sleeve banana-type jack.

The power supply is designed for low voltage and high current. A variac supplies a large step-down transformer which reduces the voltage to a maximum of 6 volts, at 40 amps; the variac has a large knob with stops to limit the range of the output from 2 to 6 volts. To keep the coil from overheating, a mat switch shuts off the main coil power supply unless a visitor is standing in front of the exhibit. The mat switch also controls a time delay relay, which protects the power supply from rapid on-and-off switching. See the schematic for power supply connections.

Note that the current meter works by measuring the voltage drop across a small (.01 ohm) resistor. This resistor is made from a short length (a cou-

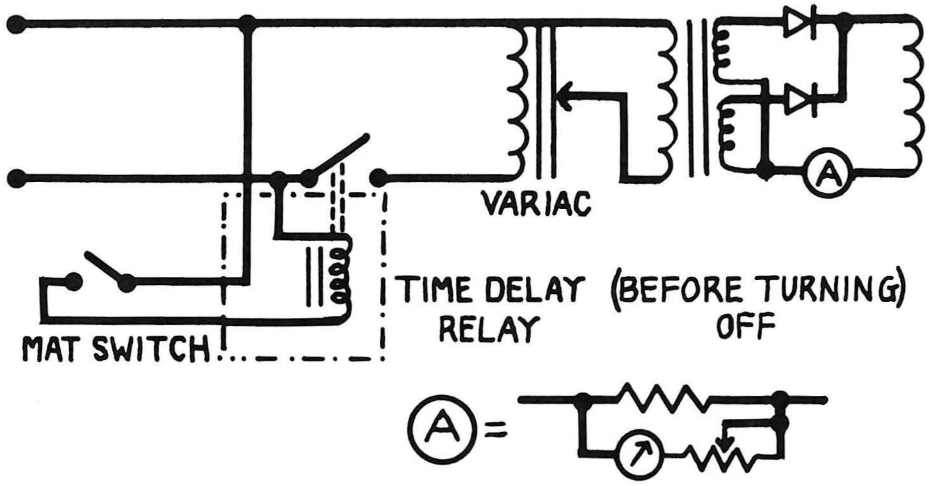

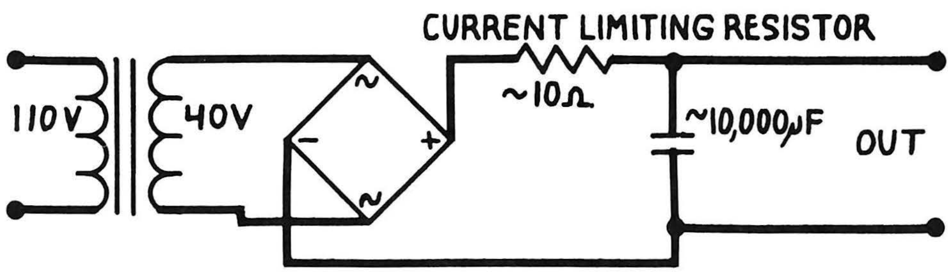

ple of feet) of 8 gauge wire. The meter is a center-zero type and reads plus or minus 40 amps, depending on which way the coil is plugged in.

A mild steel rod 1/2'' in diameter and 12'' long, with a plastic bicycle handle glued to one end, is tied to the table, as are a cow magnet* and a compass. The compass is encased in a plexiglas box for protection. Also on the table are a standard doorbell and a pinball flipper mechanism. We've replaced the doorbell cover with a plexiglas top to expose the solenoid and plunger; the transformer for this mechanism is mounted next to it. The pinball flipper is mounted on the side of a plexiglas box, with its solenoidal guts visible inside. This device requires a 40 volt power supply. You should be able to find flippers at your local pinball distributor.

*Cow magnets—Cow magnets are very good ''alnico'' magnets placed in the first stomach of cows to keep nails, barbed wire, and staples that the cow might eat from entering the digestive tract and causing ''hardware disease,'' which can be fatal to the cow. Fortunately for us these are very strong and relatively cheap magnets that can be used in many exhibits. These and just about any kind of magnet you can dream up are available from:

Dowling Miner Magnetics Corp.
21707 Eighth Street East
Sonoma, CA 95476
telephone: (707) 935-0352, or in California, (800) 535-4471

Dowling is also a good source for magnets that you can sell in your museum shop, and even has an educational magnet kit available.

Related Exploratorium Exhibits

Electrically Induced Magnetic Fields
Motor Effect; Adjustable Plaything; Eddy Currents; Ring Toss; Transformer; Very Slow Electric Oscillations.

Electric Current
Daisy Dyno; Giant Meter; Ohm's Law; P G & L; Slow Motion Switch; AM Lightning; Corona Motor; Finger Tingler; Fluorescent Tube; Hand Battery; Induction; Shaded Pole Motor I & II; Tube Amplifier; Voltage Divider; Voltage Drop; AM Radio; Argon Candle; Electrical Analogy; Hertz Resonator; Hot Effects; Giant Electroscope; Very Slow Electric Oscillations; Iron Sparks; Slow Charge/Slow Discharge.

Magnetic Fields & Forces
Magentic Tribbles; Stripped Down Motor; Magnetic Lines of Force; Magnetic Suction; Strange Attractor; Daisy Wheel Dyno; Sand Sorter; Visible Magnetic Domains; Curie Point; Giant Meter; Magnetic Light Sorter; Air Track; Shaded Pole Motor I & II; Electric Pendulum; Black Sand; Magnetic Tightrope.

Magnetic Suction

To do and notice:

●First, make sure the large coil is plugged in to the electric source. (The yellow plug is inserted into the yellow terminals.)

●Find the iron bar attached to the left side of the table and put the end into the large coil. The bar should be pulled into the coil by the magnetic field.

●Try turning the voltage up or down (black knob) and notice how this affects the force on the bar.

●Try reversing the plug. This causes the electric current to flow in the other direction. The bar should still be pulled into the coil.

●Try the same things with the magnet. The magnet is sometimes pulled in and sometimes pushed away by the coil.

●Push the buttons on the doorbell and pinball flipper and watch what happens. Try to find the coil of wire and the iron plunger.

What is going on:

An electric current flowing through any wire creates a magnetic field around the wire.

The magnetic field also has a north and south pole. The north pole of the coil attracts the south pole of the magnet and repels the north pole. The direction of the electric current flow determines which end of the coil is the north pole.

If the wire is wound into a coil the field is strongest inside the coil.

The strength of the field depends on the current, the diameter of the coil, and the number of turns of wire in the coil.

So what?

A coil of wire is called a solenoid. Often a coil is used with an iron plunger, like the iron bar here. Sending a current through the coil makes a magnetic field that pulls on the plunger, producing a linear motion from an electric current. Solenoids are used to open and close valves in many appliances, to turn on and off currents in relays and switches, to bat pinballs, and to make doorbells ring.

Ohm's Law

Description

This exhibit explores the variables in Ohm's Law, a simple equation which says that the current in a circuit is proportional to the voltage across the circuit and inversely proportional to the circuit's resistance. The visitor selects both voltage and resistance by plugging in to different sockets, and can then read the resulting current on a meter. The voltage range is from 2 to 12 volts (there's a voltage meter to monitor this), while the resistance range is from 6 to 12 ohms.

Construction

The basic parts of this exhibit are batteries, meters, resistors, and battery charging circuitry.

We use sealed lead-acid batteries. Each battery is 2 volts; we've hooked 6 in series for a total possible 12 volts. The batteries (model PS-250, 2 Volt, 5 Ampere-Hour) are available from:

Power-Sonic Corp.
P.O. Box 5342, 3106 Spring St.
Redwood City, CA 94063
telephone: (415) 364-5001

Two large meters are used—one is a straight-out-of-the-box 5 amp meter, the other a current meter with the proper series resistor to make it a 14 volt full-scale volt meter. We opened the volt meter up and re-did the face-plate so that it is calibrated in volts at the proper scale. The connection to the batteries is made via a large banana plug, installed in a machined nylon handle, that inserts into the appropriate jack on the table (six of them labeled 2 to 12 volts). We used large banana plugs (3/8" diameter) in hopes of longevity, but even these have to be replaced every once in a while. We have no commercial source for these plugs, as we scavenged them off of surplus equipment; try your local electrical supply house or surplus dealer.

We use 2 ohm, 30 watt flat wire-wound resistors that can be mounted

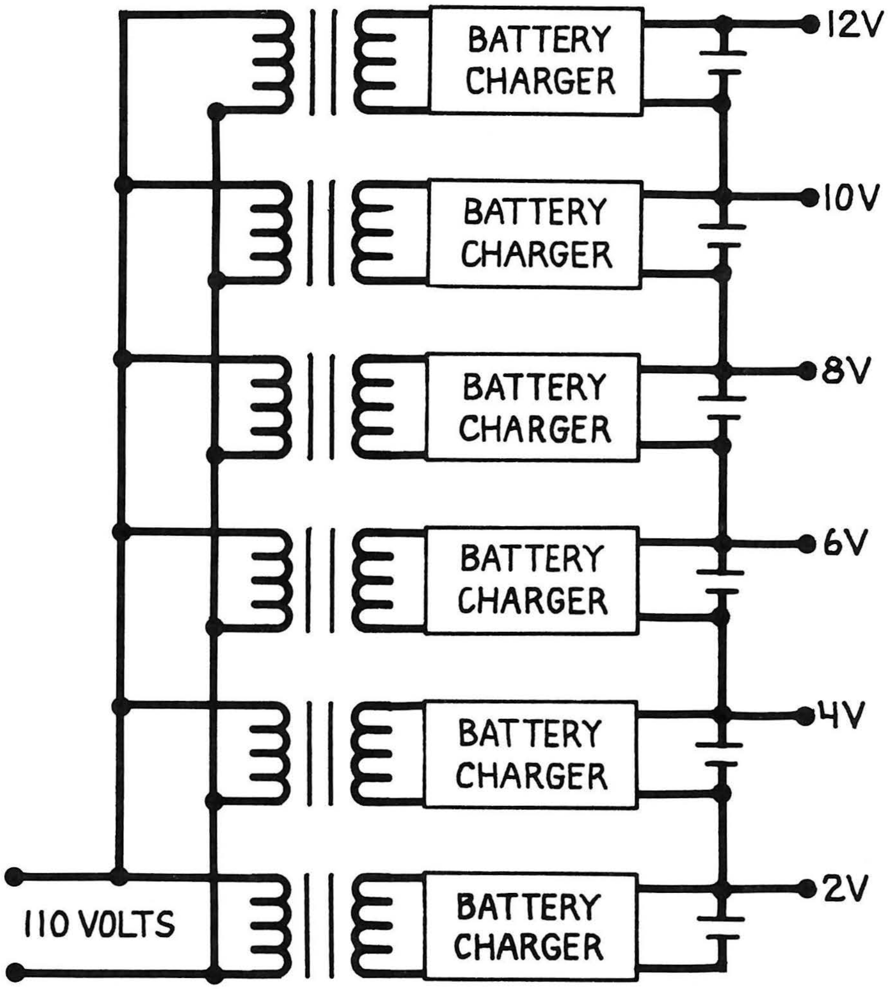

Voltage Source Schematic

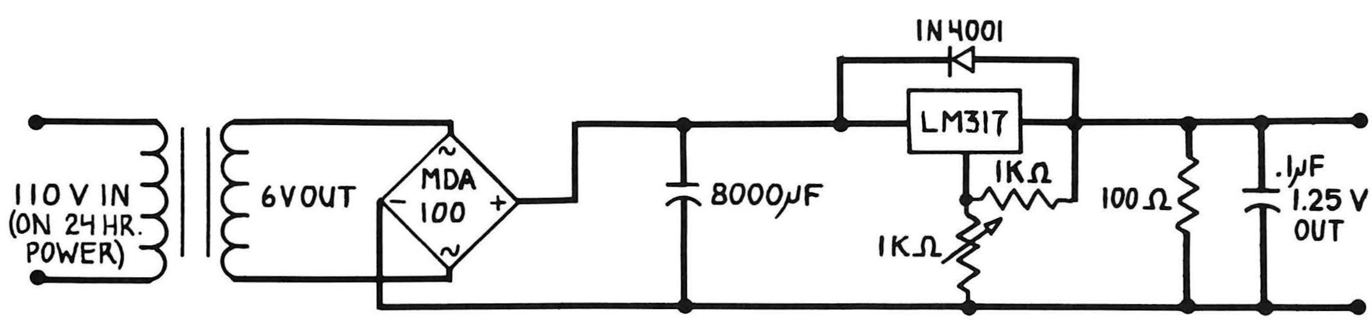

Battery Charger Schematic

above the table on stand-offs. There are six resistors in all, wired in series; but we provide taps at 6, 8, 10, and 12 ohms only—the lower resistance taps would allow excessive current to flow, which would drain the batteries too quickly. The above-described banana plug and jack system is used to select the resistance. The cord on the plug is long enough to allow a curious or puckish visitor to touch the lower resistance taps or even to short the system out; to protect the meters and batteries against a dead short, a 5 amp circuit breaker has been placed in series with the probe.

The batteries are kept charged with six individual charging circuits (see schematic), one for each battery. The chargers work continuously and are plugged into a 24 hour power outlet. To prevent the batteries from being completely discharged—in a power outage, or if a plug is accidentally pulled—a 120 volt relay powered by the line opens the circuit to the resistor plug.

Related Exploratorium Exhibits

Electric Circuits

Adjustable Plaything; Bulbs & Batteries; Slow Motion Switch; Automotive Ignition; Hand Cranked Generator; Hot Effects; Thermionic Emission; Tube Amplifier; Voltage Drop; AM Radio; Electric Pendulums; Electrical Analogy; Energy vs. Power; Hertz Resonator; Very Slow Electric Oscillations; Slow Charge/Slow Discharge.

Electrical Resistance

Carbon Filament; Carbon Microphone; Short Circuit; Fading Tone; Finger Tingler; Voltage Divider; Voltage Drop; Induction; Giant Electroscope.

Electric Potential

Pacific Gas and Leather; Electroscope; Hand Battery; Polaroid Sunglasses; Pluses and Minuses.

Exploratorium Exhibit Graphics

Ohm's Law

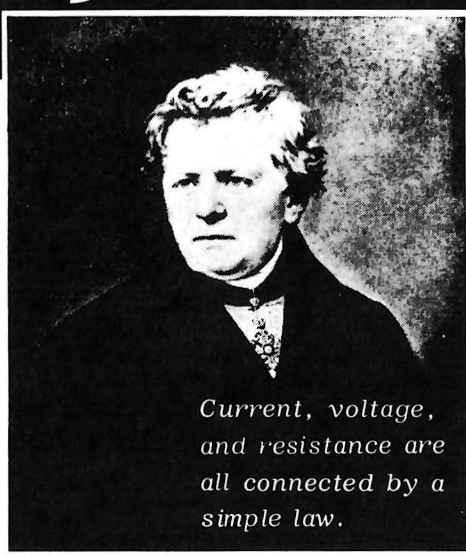

To do and notice:

Plug the left probe into one of the battery jacks. Each of these jacks provides a different *voltage*, shown by the bottom meter.

Plug the right probe into one of the resistor jacks, completing the circuit. The batteries' voltage forces a *current* (a flow of electricity) through the resistors.

The top meter shows how the current changes when you plug into different resistors. If you touch the probe to the bottom copper wire instead of to a resistor jack, a very large current will flow through the circuit, tripping the *circuit breaker*. This breaker cuts off the current to protect the meter. (Press the button to reset.)

What is going on:

When you plug in the two probes, the voltage of the batteries forces an electric current to flow through the circuit. The amount of current that flows is found by a simple equation, called *Ohm's Law* after its discoverer, G.S. Ohm. The equation is:

$$\text{CURRENT} = \frac{\text{VOLTAGE}}{\text{RESISTANCE}}$$

where current is measured in *amperes*, voltage in *volts*, and resistance in *ohms*. For example, twelve volts across a resistance of six ohms yields two amperes (12/6) of current. Try it!

This exhibit is also a crude computer. Want to know 8 divided by 6? Plug into the 8-volt tap and the 6-ohm tap, and read the answer on the current meter. All *analog computers* work on a similar principle.

PG & L (Pacific Gas and Leather)

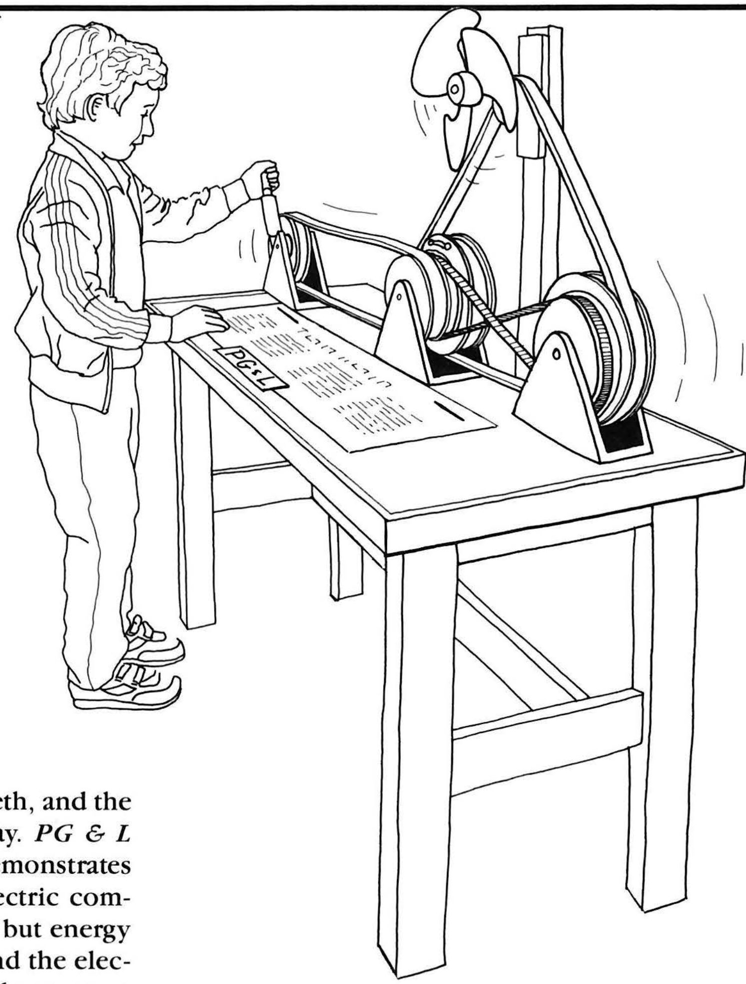

Description

The electric company giveth, and the electric company taketh away. *PG & L* (*Pacific Gas and Leather*) demonstrates by analogy that what the electric company sells us is not electrons, but energy in the form of the push behind the electrons. The visitor moves a lever on a wheel back and forth, forcing a belt around the wheel to also move back and forth. This back-and-forth belt represents the current in an AC circuit. As the rest of the exhibit is powered, it is obvious that no leather is "used up"—the loop only oscillates back and forth ("Alternating Leather"). This belt drives another wheel which, through a set of ratchets and belts and more wheels (a mechanical full wave bridge "leather rectifier"), converts the back-and-forth motion of the "alternating current" belt into into the unidirectional motion of a "direct current" belt, which in turn powers a fan. Again, the visitor can see that the DC belt is not used up, but is just a vehicle for the energy transferred to it.

Construction

Our version of this exhibit takes some metal lathe expertise to build. Three sets of wheels—all of them aluminum—are fashioned as in the diagrams. The first wheel is the simplest, with only one belt around it; it is this wheel that the visitor operates by moving the attached lever back and forth. Each of the next two sets of wheels has two independent wheels, both of which ride on the same shaft and are linked by a ratchet gear and spring-loaded pawl so that they rotate together in one direction only. The middle set is the more complicated of the two since three belts wrap around it: the belt from the left hand drive-wheel, the belt to the fan above, and the belt that connects the middle to the right-hand set of wheels (see cross section). The right-hand set is a little simpler since only two belts wrap around it: the belt connecting it to the middle set, and the belt to the fan (see cross section).

The ratchet is simply a 6" diameter, 1/4" thick gear, and the pawl is a comma-shaped piece of steel cut from 1/4" steel plate. Both pawls are springloaded so they engage the ratchet gear continuously. To make them

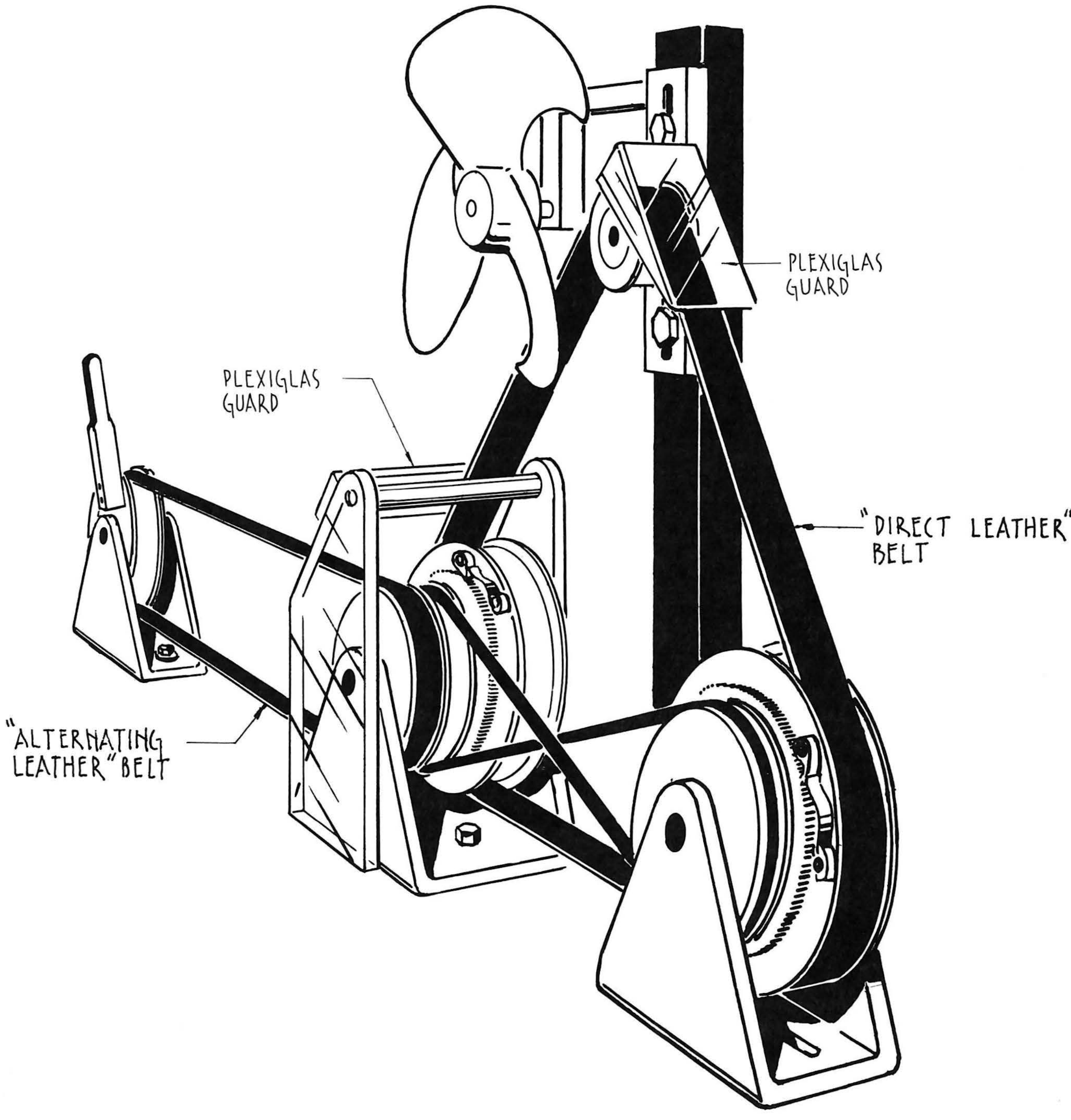
PLEXIGLAS GUARD
PLEXIGLAS GUARD
"DIRECT LEATHER" BELT
"ALTERNATING LEATHER" BELT

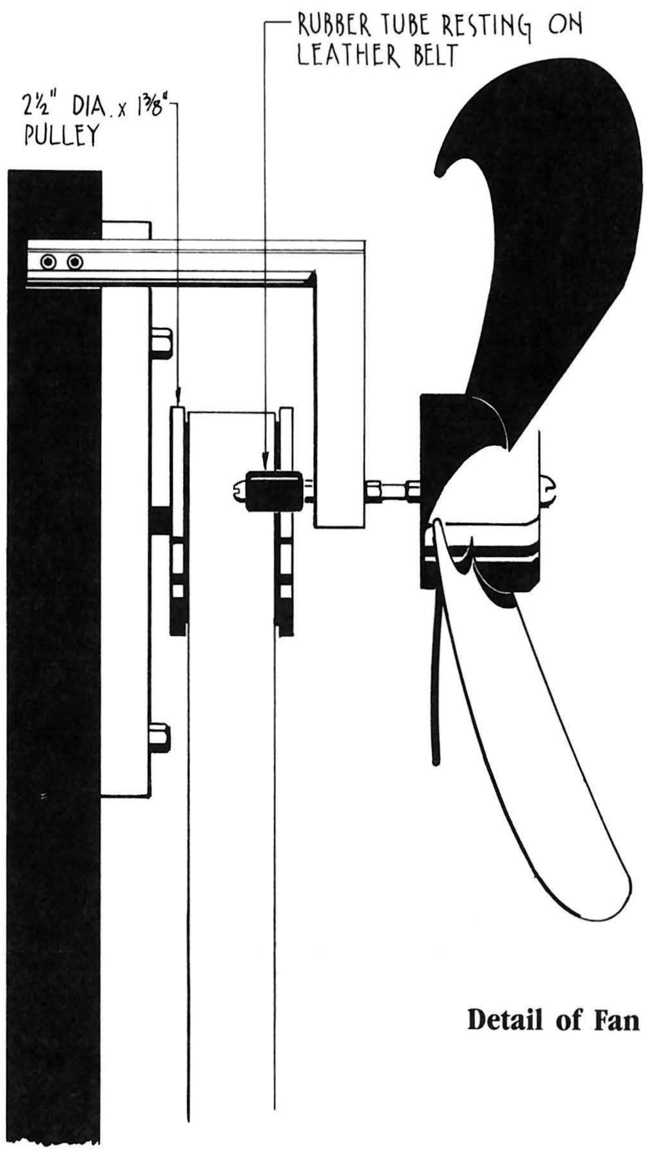

Detail of Fan Driver

free to rotate, each pawl has a brass bushing in the pivot which in turn is screwed to the wheel.

The flat leather belt that drives the fan passes over a 2-1/2'' diameter roller mounted on a post between the two right-hand wheels; a small axle covered with rubber tubing bears on top of this belt (see diagram). The fan assembly on the post is adjustable up and down to allow for ease of mounting and proper tensioning of the leather belt.

Two types of belts, both leather, are used in this exhibit. A flat belt 1'' wide and about 3/16'' thick is used to connect the lever drive wheel with the middle wheel (the alternating current belt), and the same type of belt connects the ''diode'' wheels to the fan (the direct current belt). These belts represent the flow of electricity in our system. The belt connecting the two ''diode'' wheels is a round leather belt about 3/8'' in diameter. We have the flat belts made up to length and we make up our own round belts; look in your local phone directory yellow pages under ''Belting-Mechanical'' for a supplier in your area who can make belts, sell you some tools, and provide helpful information.

We've added some strategically placed plexiglas guards (see diagram) to protect fingers from getting caught between belts and wheels.

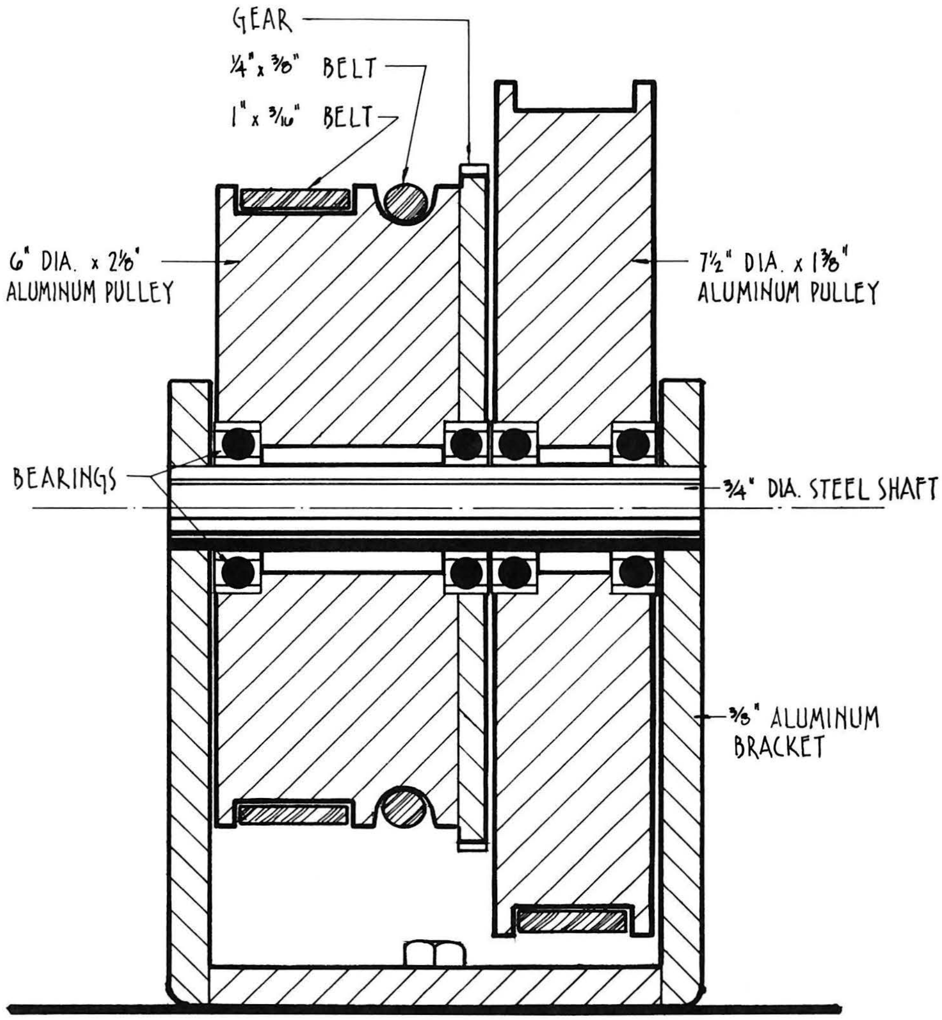

Cross Section of Middle Wheels

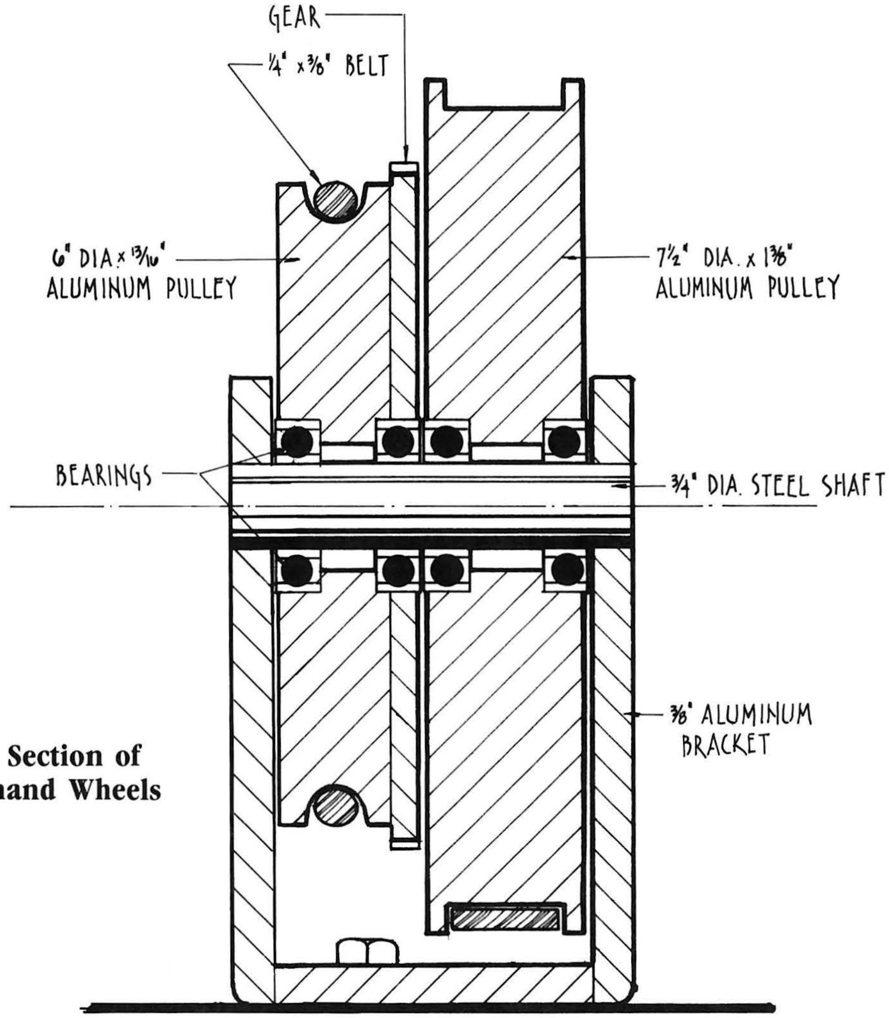

Cross Section of Right-hand Wheels

Critique and Speculation

We've had some trouble keeping the pawls engaged in the ratchet gears because they can wobble slightly on their bushings. If each pawl were instead mounted solidly on a steel shaft that passed completely through the wheel, we think they would be less likely to tilt and get stuck.

Related Exploratorium Exhibits

Electric Potential

Bulbs & Batteries; Ohm's Law; Electroscope; Hand Battery; Voltage Divider; Voltage Drop; Polaroid Sunglasses; Very Slow Electric Oscillations; Pluses and Minuses; Giant Electroscope.

Oscillation

String Analogy; Vibrating String; Harmonic Series Wheel; Side Bands; Phase Pendulum; Theremin; Kettledrum; Relative Motion Pendulum; Visible Effects of the Invisible.

Exploratorium Exhibit Graphics

Pacific Gas and Leather

This exhibit was conceived to illustrate that our use of language in connection with electricity is misleading. Although we talk of making and using electricity, we neither "make" nor "use up" electricity any more than this exhibit "makes" or "uses up" leather to transmit power!

You do not buy electricity, you buy energy.

This exhibit also shows that one can transform a back and forth motion into a continuous motion in one direction. This process is called rectification and also transforms A C (Alternating Current) into D C (Direct Current).

The blue wheels and leather correspond to the A C. The shiny wheel and fan correspond to D C.

To do and notice:

Move the plastic lever attached to the left hand blue wheel back and forth and watch what happens.

What is going on:

When the blue wheels move back and forth, they move the wheels with the teeth back and forth. A lever with a sharp edge pushes on the teeth. This lever catches the teeth on its steep side and rises up on its sloping side. This arrangement, called a ratchet, allows the wheels to turn in one direction only. The twisted round belt makes the two blue wheels move in opposite directions so that the fan rotates for both the back and the forth movement of your hand.

The fan has to be D C in order to work properly. There are also many electrical devices that require D C even though A C is supplied by P.G.&E.

PG and L

Recipe No. 150

Pedal Generator

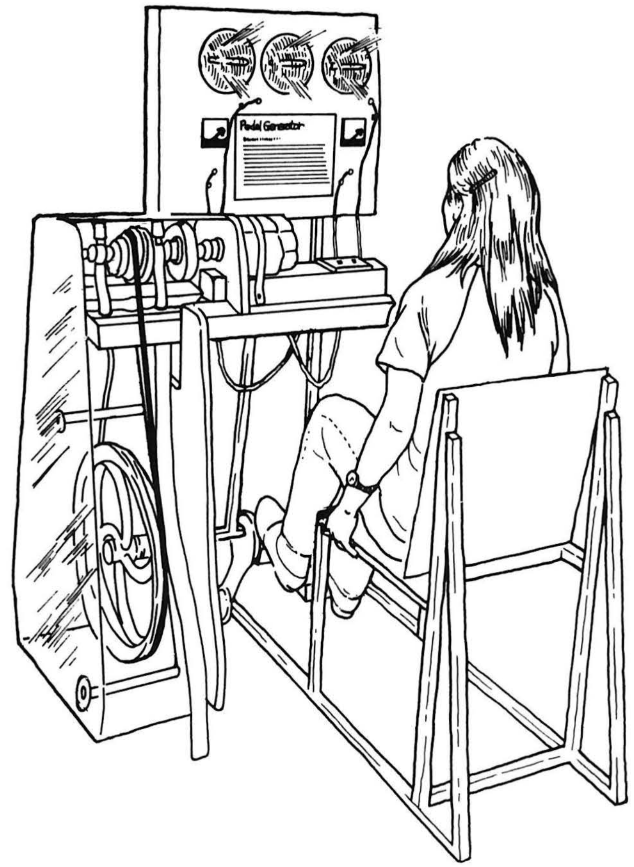

Description

This exhibit demonstrates that it takes WORK to generate electricity. The visitor sits in a chair in front of an antique foot operated lathe. When the lathe is pedaled, one or three lights may be switched on. When the lights are off, it's easy to pedal; when one light is turned on, it becomes much more difficult to pedal; and when three lights are turned on the visitor must pedal furiously to keep all three at the brightness of the original one lamp. The current into and out of the lamps can be monitored (on separate meters); significantly, just as much current comes out of the lamps as goes into them—a very fundamental concept. Electrons are not "used up" by the lamps, but simply leave them with less energy than they entered with.

Construction

You obviously can't expect to find an antique foot operated brass-turning lathe (if you've got one, good for you!), so you'll have to improvise your own pedaling device. Several alternatives have been spied by the author and other Exploratorium staffers while visiting other museums. Typically they involve a very rugged modified bicycle. The chain drive for the bicycle spins the generator as well as a conventional bicycle wheel (which acts as a flywheel and tends to smooth out the motion of the mechanism). The pedals and cranks are usually the major source of problems in this system, with the pedals being the first things to break—so put some concentrated engineering and design work into this area. On our lathe people pedal a crank-shaft (like in a car)—with heavy wooden block pedals mounted on bronze bushings—and still manage to break the thing every so often.

Our generator is actually a permanent magnet DC motor. It is rated at 1/4 horsepower, 530 RPM, 24 volts, 18 amps. Any similar motor should do the job. We step up the RPM on our lathe about six to one (one rotation of the pedals makes the generator turn six revolutions); you should do the same if you use a similar motor/generator. The lamps are controlled with two common household wall switches: one switch turns all of the lamps on and off, while the other selects between one or three lamps.

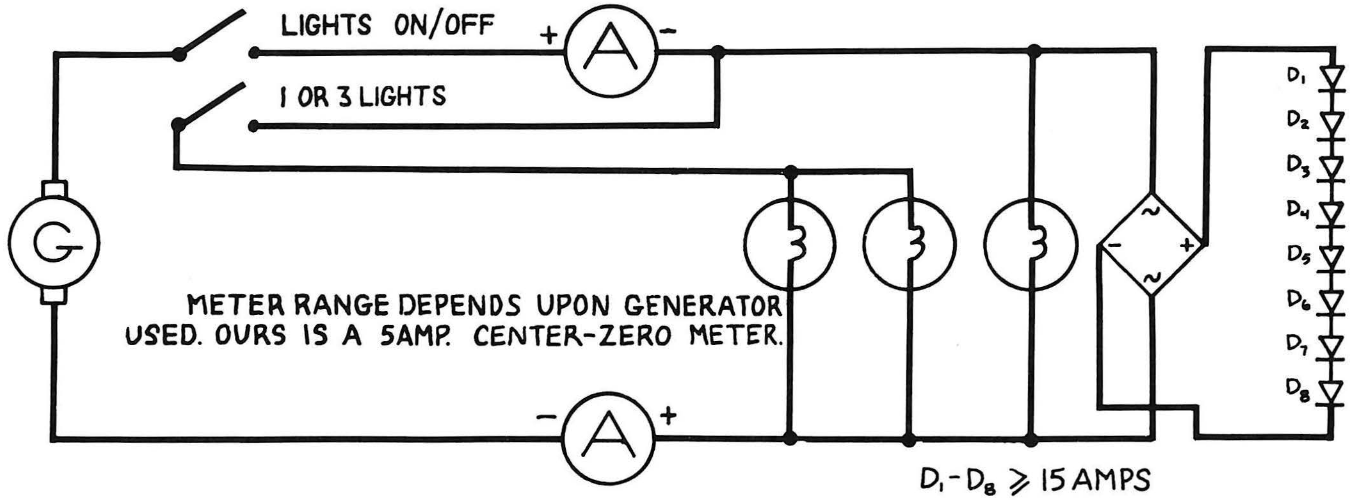

The lamps are 6 volt car headlamps (GE 6006). Each is wired with its low and high beam filaments in series, which gives an effective 12 volt lamp (see schematic). It is possible to blow out the first lamp by pedaling very fast and then turning it on, so we've protected this lamp with a bridge rectifier and series diodes. The bridge must be rated at 15 amps (minimum) at 50 volts. The diodes act as a voltage clamp, limiting the voltage to around 13 volts. The number of diodes in the series string was determined empirically; if the diodes switch on too soon, they interfere with the "feel of the exhibit," i.e., lighting one bulb feels no different from lighting three. All of the work goes into the clamp. Choose the number of diodes that gives your exhibit the right feel. Note that these must be high current, heat-sinked diodes, or they will burn out immediately.

Two current meters, one on the input to the lamps and one on the output from them, are displayed on the lamp panel. These are center-zero meters, so the visitor can pedal in either direction and notice the change in direction of the current. The proper shunt must be determined empirically for your apparatus. Make sure that the meters read the same at all current levels.

Critique and Speculation

Small kids can't reach the pedals from the seat in this exhibit—a serious drawback. One solution to this problem is to use a "banana" style bicycle seat, inclined so that the back end is higher than the front; this way everybody can find a position that works. Another solution is to build the exhibit so that it is pedaled like a recumbent bicycle (legs out in front), and allow the visitor to move the chair forward and back on a rail, like in an automobile. (This solution comes from Bill Walton at the Science Museum of Virginia.)

Our two-switch lamp switching arrangement can be confusing to the visitor; you might want to try a single rotary switch with positions for 0, 1, 2, and 3 lamps.

This is one of the few exhibits where we don't show the wiring—we thought that with the protective diodes it would be too confusing to the visitor. I think we could have put the protective electronics in a smoked plexiglas box and labeled it "Over-voltage Protection" without scaring the public too much. Exhibit wiring should be visible whenever possible.

Exploratorium Exhibit Graphics

PEDAL GENERATOR

ELECTRIC LIGHTS REQUIRE MORE POWER THAN YOU MIGHT THINK.

To do and notice:

- Use the left-hand switch to turn on one light, and pedal the generator fast enough to make the meter read 25.
- Now use the right-hand switch to turn on all three lights. Notice that the light dims and the current meters fall a little. Pedal faster to make all three lights shine brightly.
- Flip both switches off and notice that it's easier to pedal without the lights.

What is going on:

This pedal generator turns mechanical energy from your legs into electrical energy to light the bulbs.

Notice that the meters show the same amount of current entering and leaving the lights. The lights don't use up any electric current; this current is merely a *carrier* for the energy you put in with your legs (See the related exhibit PACIFIC GAS AND LEATHER.) PG&E would charge about a penny for enough electrical energy to keep all three lights brightly lit for two hours.

Related Exploratorium Exhibits

Conservation of Energy Change

Eddy Currents; Air Track; Downhill Racer II; Drawing Board; Pluses and Minuses; Coupled Resonant Pendulums; Lunar Lander; Balancing Stick; Vortex; Chaotic Pendulum.

Electric Current

Daisy Dyno; Giant Meter; Ohm's Law; P G & L; Slow Motion Switch; AM Lightning; Corona Motor; Finger Tingler; Fluorescent Tube; Hand Battery; Induction; Shaded Pole Motor I & II; Tube Amplifier; Voltage Divider; Voltage Drop; AM Radio; Argon Candle; Electrical Analogy; Hertz Resonator; Hot Effects; Giant Electroscope; Very Slow Electrical Oscillations; Iron Sparks; Slow Charge/Slow Discharge.

Magnetically Induced Electric Fields

Generator Effect; Stripped Down Motor; Automotive Ignition; Slow Motion Switch; Electric Pendulum; Induction; Shaded Pole Motor I & II; Hertz Resonator.

Power

Curie Point Motor; Carbon Filament; Energy vs Power; Color Temperatures.

Short Circuit

Description

In the course of planning the electricity section at the Exploratorium, we held a conference to which we invited many learned people. When asked the question, "What turned you on to the phenomenon of electricity?", most of the males in the room remembered getting an electric train set for Christmas and having as much fun vaporizing the tree tinsel across the electrified tracks as they had actually playing with the trains. We decided that everyone should have this opportunity, and the result was this exhibit.

A short piece of thin wire is placed across the terminals of a battery. The wire heats up red-hot and then burns through. It's not quite as exciting as the original model railroad, but at least it's safe.

Construction

This exhibit consists of two basic parts: the batteries and the wire cutter/dispenser.

The power to heat the wire is provided by two "C" size nickel-cadmium batteries wired in parallel. The ends of the batteries are solder-connected with thick wires, which in turn are soldered to L-shaped copper strips, both of which extend vertically above the batteries and are the contacts on which the thin wire is placed. The batteries and copper strip contacts are bolted to a small wood base and covered with a transparent box, which is slotted so you can insert the wire but can't reach in and touch the hot part between the contacts (see diagram). The wire has a low enough heat conductivity that visitors can hold the ends bare-handed and not feel any heat. We began using pieces of glass for the tops of the box when we found that plexiglas scratched too much. The bolts to the copper strips extend through the table top and attach to the battery charger underneath. The battery charger must be left on 24 hours a day. Note that the distance between the copper contacts is important: if they are closer together, more current flows (less resistance in the wire) and the wire burns through more quickly.

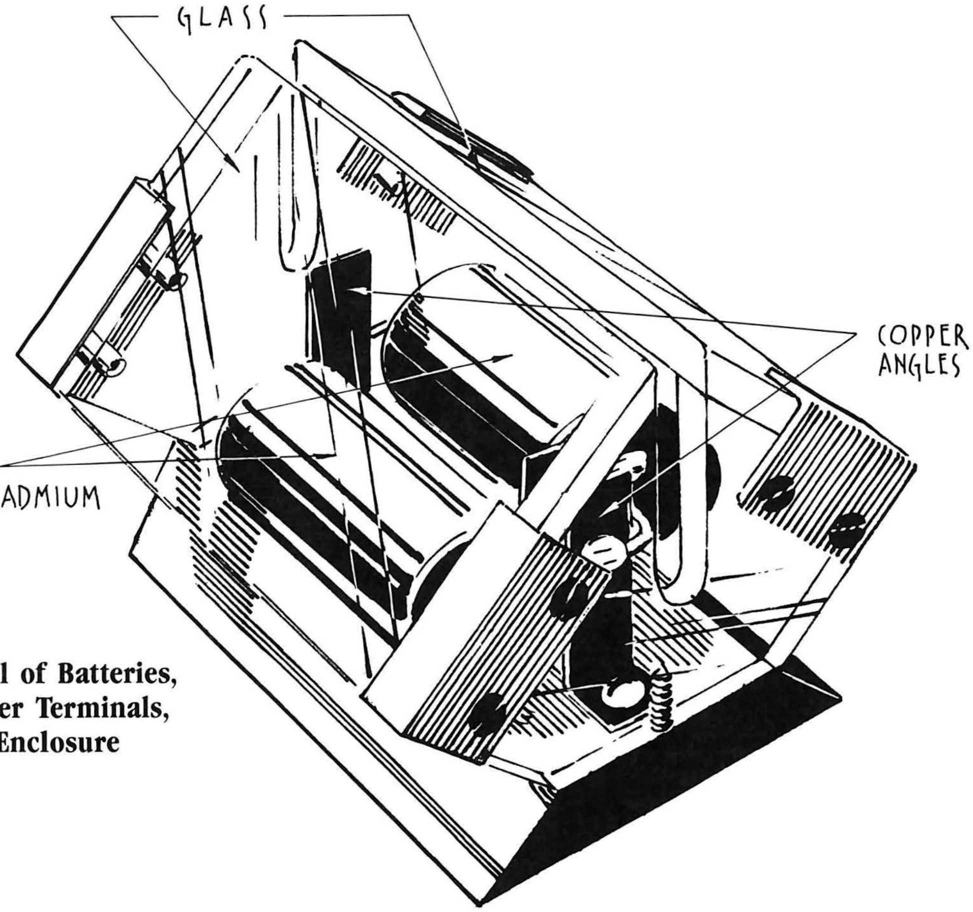

Detail of Batteries, Copper Terminals, and Enclosure

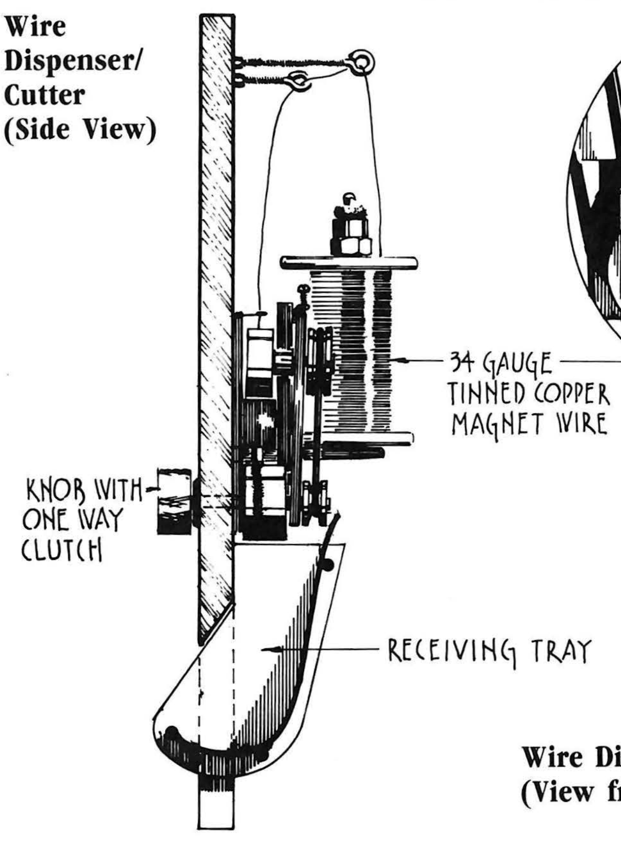

Wire Dispenser/ Cutter (Side View)

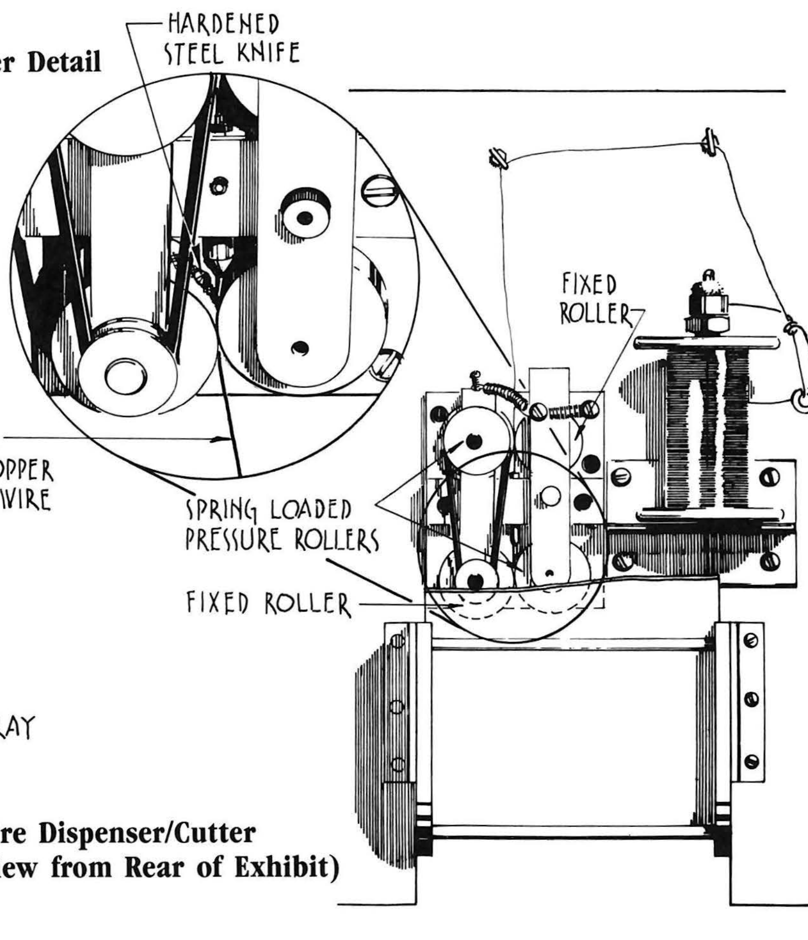

Wire Cutter Detail

Wire Dispenser/Cutter (View from Rear of Exhibit)

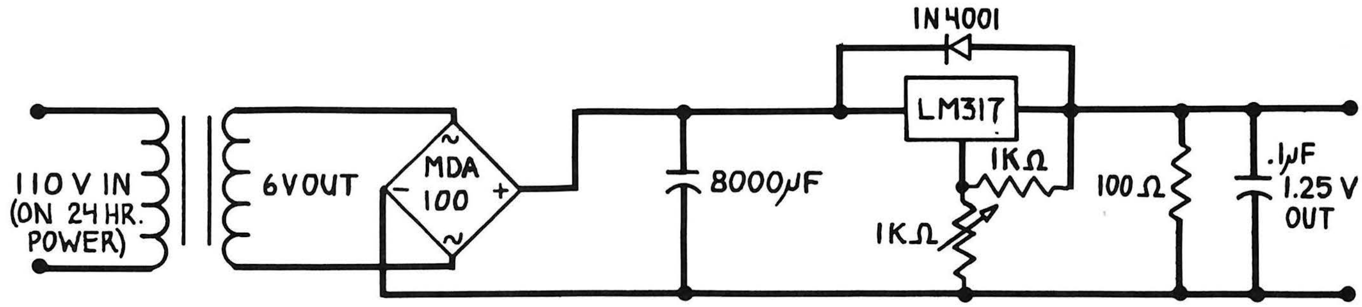

Battery Charger Schematic

We use #34 gauge tinned copper magnet wire in this exhibit. It takes about 5 amps to make this wire glow and melt. (This is more than the battery charger will provide—we aren't trying to fool anyone by hiding the charging wires, we're just trying to simplify the exhibit.) We buy this wire from:

MWS Wire Industries
31200 Cedar Valley Dr.
Westlake Village, CA 91362
telephone: (818) 991-8553

We have the wire wound on 5'' spools; about 20,000 feet fit on one of these spools, which lasts an average of 6 months. Our last order (1985) of 5 spools cost us about $100 (1985 prices).

The wire is cut to 5'' lengths and delivered to the visitor with a clever little device (see diagram). The wire is de-spooled and sent through two sets of spring-loaded pressure rollers. The first set of rollers is rubber coated nylon and the second set is lightly knurled steel. The steel rollers are driven by the knob that the visitor turns, and the nylon rollers are driven by an O-ring drive belt from the steel rollers. The belt drive is set up so that the steel rollers turn faster than the nylon rollers; in this way, the wire is always kept tight between the two. The drive knob has a one-way clutch so visitors can't run the rollers backward. A ''knife'' ground from hardened toolsteel rod stock is implanted in one of the steel rollers, from which it barely protrudes. As the wire is rolled through, once every circumference it gets cut by the knife and drops away into a receiving tray. The steel rollers have a tendency to lose their grip on the loose end just as the wire is cut, but the nylon rollers make sure that the wire is always fed back into them.

We've modified a floor standing ashtray for discarding the burned-out wire—the bottom of the tray is cut out, and a cut-off funnel inserted. This unit is strapped to the side of the exhibit. Be sure to put a ''Wires Only—No Garbage'' sign on the ashtray to keep other trash from gathering (it does anyway).

This exhibit does tend to clutter the surrounding floor with tiny pieces of wire. People may be more hesitant about sullying a nice tile or wood floor, but I wouldn't bet on it.

Related Exploratorium Exhibits

Electrical Resistance

Carbon Filament; Carbon Microphone; Bulbs & Batteries; Slow Motion Switch; Fading Tone; Ohm's Law; Finger Tingler; Hand Battery; Hot Effects; Voltage Drop; Energy vs Power; Induction; Slow Charge/Slow Discharge; Giant Electroscope.

Electric Current

Daisy Dyno; Giant Meter; Ohm's Law; P G & L; Slow Motion Switch; AM Lightning; Corona Motor; Finger Tingler; Fluorescent Tube; Hand Battery; Induction; Shaded Pole Motor I & II; Tube Amplifier; Voltage Divider; Voltage Drop; AM Radio; Argon Candle; Electrical Analogy; Hertz Resonator; Hot Effects; Giant Electroscope; Very Slow Electrical Oscillator; Iron Sparks; Slow Charge/Slow Discharge.

Production of Light

Stored Light; Kinetic Light Sculpture; Tesla Coils; Bridge Light; Hot Spot; Photoelectricity I; Fluorescent Rods; Spark Chamber; Sun Painting; Glow Wheel; Iron Sparks; Spectra; Color Temperatures.

Short Circuit

A large electric current can melt a wire.

To do and notice

Turn the knob once to dispense a piece of wire.

Place the wire across the battery terminals.

Discard the melted wire.

What is going on

The wire, which is made of tinned copper, is an excellent conductor of electricity. When you touch this wire to the two battery terminals, the battery easily pushes a large flow (or current) of electricity through the wire. This large current makes the wire heat up and eventually melt.

In a normal electric circuit, a current of electricity powers an appliance, such as a light bulb or a radio. These appliances have some electrical *resistance*, which restricts the amount of current flowing through the circuit. A *short circuit* occurs whenever the current finds a short, unrestricted path to flow along, allowing it to bypass the appliance altogether.

When you touch the wire to the battery terminals, you give the current a short path with very little resistance. This creates a kind of short circuit.

So what

A household *fuse* contains a small strip of metal, which acts like the piece of wire in this exhibit. Electricity entering your home must pass through this strip of metal in the fuse. If too much current passes through the fuse, the strip melts, breaking the path of the current. If there were no protective fuse, your household wiring might receive more current than it was designed to carry. Excess current can make the wiring heat up too much and possibly cause a fire.

Recipe No. 152

Son of Transformer

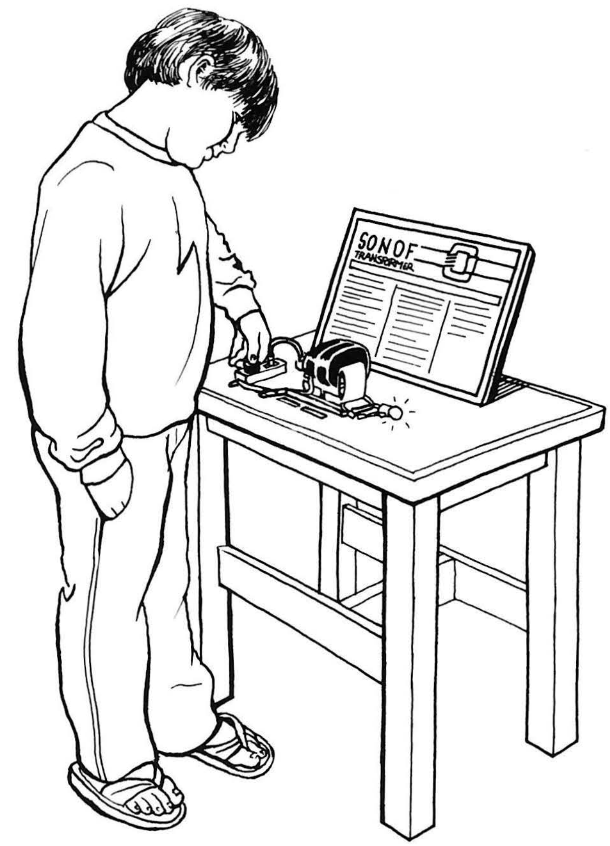

Description

Just when you thought it was safe to go into the electricity section again... This exhibit is a sequel to *Transformer* (see the recipe in this Cookbook). An exposed iron core is wound with a primary coil on one side and a secondary coil on the other. The primary is supplied with a DC current through a switch operated by the visitor. The secondary is connected to a light bulb. The visitor notices that the light only flashes at the moment the current is turned on or off. When the switch is held on, sending current through the primary and making the iron core into an electromagnet, a spring loaded steel hinge is attracted to the core. The visitor can easily see that even though the steel is attracted to the core, the light won't flash unless the current (and hence the magnetic field) is changing.

Construction

We started with two "C" shaped laminated iron transformer cores which someone donated to the museum; the dimensions are given in the diagram. You will have to find a suitable core for your exhibit—they're available from a variety of transformer manufacturing companies.

The coils on our exhibit are made of 18 gauge wire. They were probably wrapped on a mandrel the same dimensions as the core; the holes in the coils measure 11/16 x 2"; the primary has about 150 to 200 turns and the secondary about 400 turns. Both coils are potted in clear epoxy resin, which keeps people from scraping the lacquer insulation off of the outside windings and causing shorts.

Both halves of the core are mounted on a 1/4" thick aluminum plate. The core pieces seem to be butted together, but some adjustment will have to be made in the gap between them, so that the lamp will flash equally bright when the key switch is turned on or off. To facilitate this adjustment, one of the core pieces is mounted with spring washers so that there is some freedom of movement; try inserting various non-magnetic materials (business cards, etc.) in the gap until you get it right.

Our GE 64 lamp is mounted to the table in its bayonet socket. It is unprotected and can easily be removed for repair. Although the lamp is completely vulnerable, it is almost never tampered with or stolen.

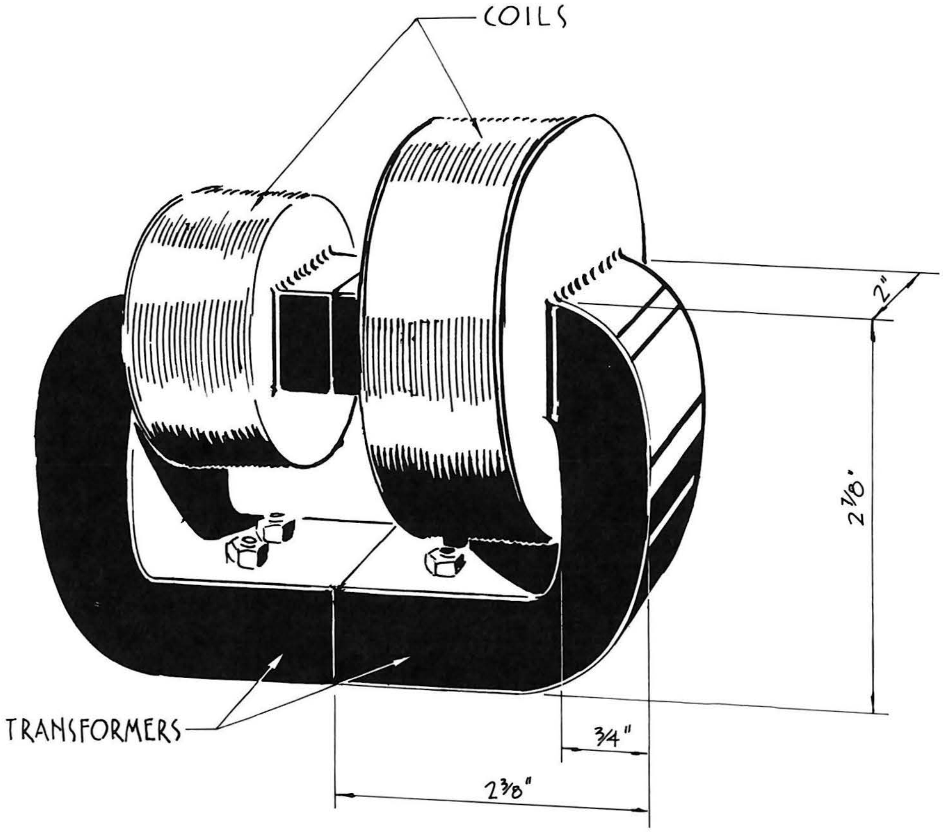

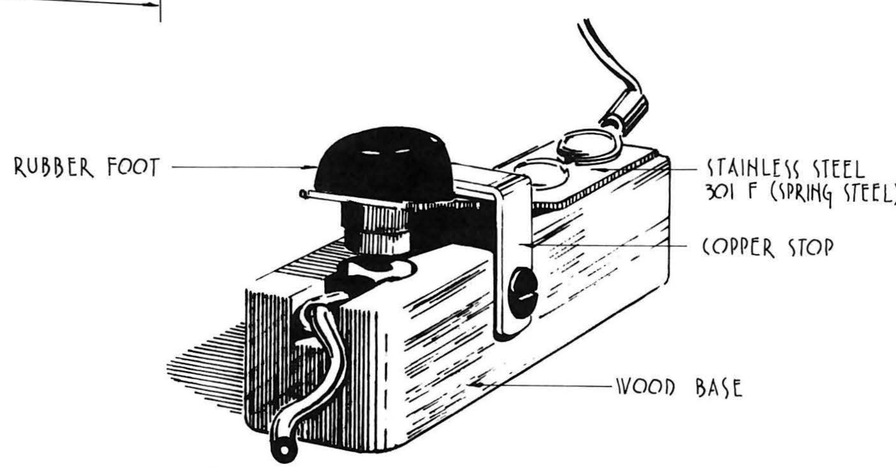

The schematic for the exhibit is given below. Note the capacitor and diode that protect the switch: without these, arcing will destroy the switch contacts in short order.

We use simple telegraph-type key switches wherever possible. They are sturdy and there is no doubt about what's going on with such a simple mechanism.

A hinge is mounted on the table behind the core. When the current is turned on, the free plate of the hinge is attracted to the core, making a pleasing "click" as it hits. A small leaf spring pushes the hinge about 1/4" away from the core when the current is turned off.

Critique and Speculation

Unless the visitor notices that the hinge is sticking to the core, there is no evidence that current is flowing through the primary coil. It might be instructive to have some further indication of current flow—maybe a light bulb across the primary, or a compass strategically located near the core, or a meter on the primary.

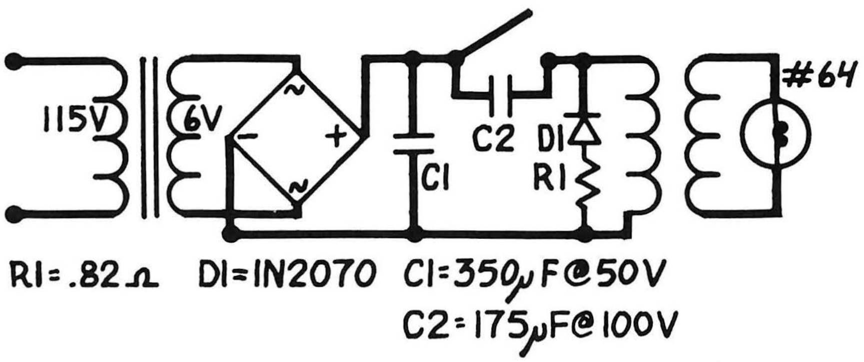

Related Exploratorium Exhibits

Electric Current

Giant Meter; Ohm's Law; Pacific Gas and Leather; Pedal Generator; Slow Motion Switch; AM Lightning; Corona Motor; Finger Tingler; Fluorescent Tube; Hand Battery; Induction; Shaded Pole Motor I & II; Tube Amplifier; Voltage Divider; Voltage Drop; AM Radio; Argon Candle; Electric Pendulum; Electric Analogy; Energy Vs Power; Hertz Resonator; Hot Effects; Pluses and Minuses; Giant Electroscope; Thermionic Emissions; Very Slow Electric Oscillations; Iron Sparks.

Electrically Induced Magnetic Fields

Motor Effect; Adjustable Plaything; Eddy Currents; Ring Toss; Very Slow Electric Oscillations; Transformer.

Magnetically Induced Electric Fields

Generator Effect; Stripped Down Motor; Pedal Generator; Automotive Ignition; Electric Pendulum; Induction; Shaded Pole Motor I & II; Hertz Resonator.

Exploratorium Exhibit Graphics

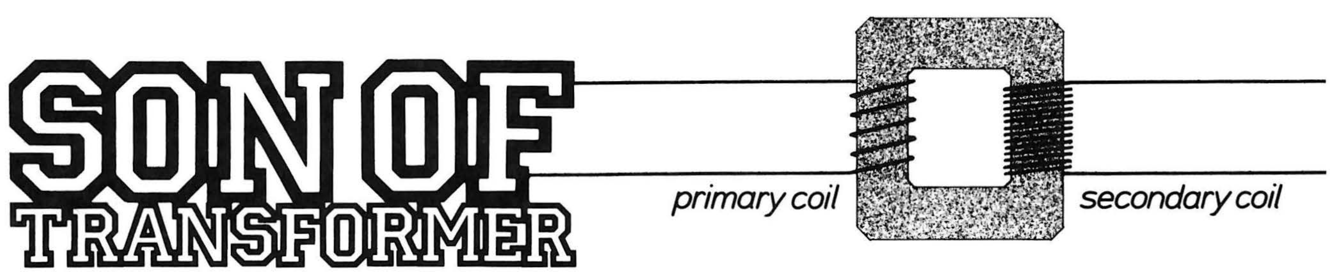

To do and notice:

- Push and hold the switch. The light flashes briefly.
- When you release the switch, the light flashes again.
- Try to keep the lamp lit by tapping the lamp several times in rapid succession.

What is going on:

This transformer consists of two separate coils of wire (a primary coil and a secondary coil), wrapped around a single iron core. The secondary coil is not connected to any source of power. However, electric power flowing through the primary can create electric power in the secondary. This power is transmitted from the primary to the secondary by means of a changing magnetic field.

When you push the switch, the battery sends an electric current through the primary coil. This current creates a magnetic field in the coils and in the iron core. As it grows, this magnetic field creates an electric current in the secondary coil. This current makes the bulb light up. Notice that only a changing magnetic field can make current in the secondary coil. The bulb lights only at the moment the switch opens or closes. When you hold the switch down, the magnetic field is steady, so there is no current created in the secondary coil.

So what:

Only a changing electric current can transfer power from the primary to the secondary of a transformer. A transformer can therefore be used as a kind of filter, which blocks steady electric signals and lets changing signals pass. Your telephone set uses a transformer in this way.

A magnetic field can transfer electric power from one coil to another.

Suspense

Description

Many people think that feedback only occurs when a microphone gets near a speaker. Feedback is also a very important mechanical and biological process that is often overlooked in museum exhibits. When you reach for an object, visual and tactile feedback help your muscles make "mid-course corrections" so that your hand arrives on target. In this exhibit a small steel earth globe is suspended in midair a short distance beneath an electromagnet. This occurs because the globe interacts with a light beam that is shining on a photocell. As the globe drops lower, more light hits the photocell and the circuitry turns up the current of the electromagnet. If the globe is then pulled up too high, it blocks more light, and the electromagnet is turned down.

Construction

This exhibit is fairly simple to build, but getting it to work will take some patience—you might want to experiment with a prototype before attempting a floor model. It consists mainly of a structure to hold the light source, photocell, and electromagnet assemblies, with a fan-ventilated cabinet to house both this structure and the drive electronics. The main support structure is a 2" square steel tube welded to a base plate. Over this tube fits a cross arm which holds the light source and photocell. The electromagnet support assembly slides onto the tube above the cross arm. Both the cross arm and electromagnet assembly are adjustable up and down (important!) and are locked in place with set screws.

Our light source is a GE 89 lamp viewed end on. Light from this lamp is brought to a focus with a simple lens (focal length about 2"). Both lens and lamp are housed in an aluminum tube on the left arm of the cross arm. The light comes to a focus before reaching the globe; this gives the globe a circle of light to block and unblock, rather than a focused point (the size of the circle somewhat determines the gain or amplification factor of the feedback loop). The light passes beneath the electromagnet and into a 2" lens from a 16mm movie projector, which focuses the light onto an MRD300 phototransistor. The lens and photo-transistor are housed in another aluminum cylinder on the right arm of the cross arm. The phototransistor is mounted in the center of a thick plexiglas disk which is frosted on the side facing the lens. The lens projects an image of the globe and the tip of the electromagnet on this frosted plexiglas screen, which can be viewed from the side.

Light Source/Solenoid/Photocell Cross Section

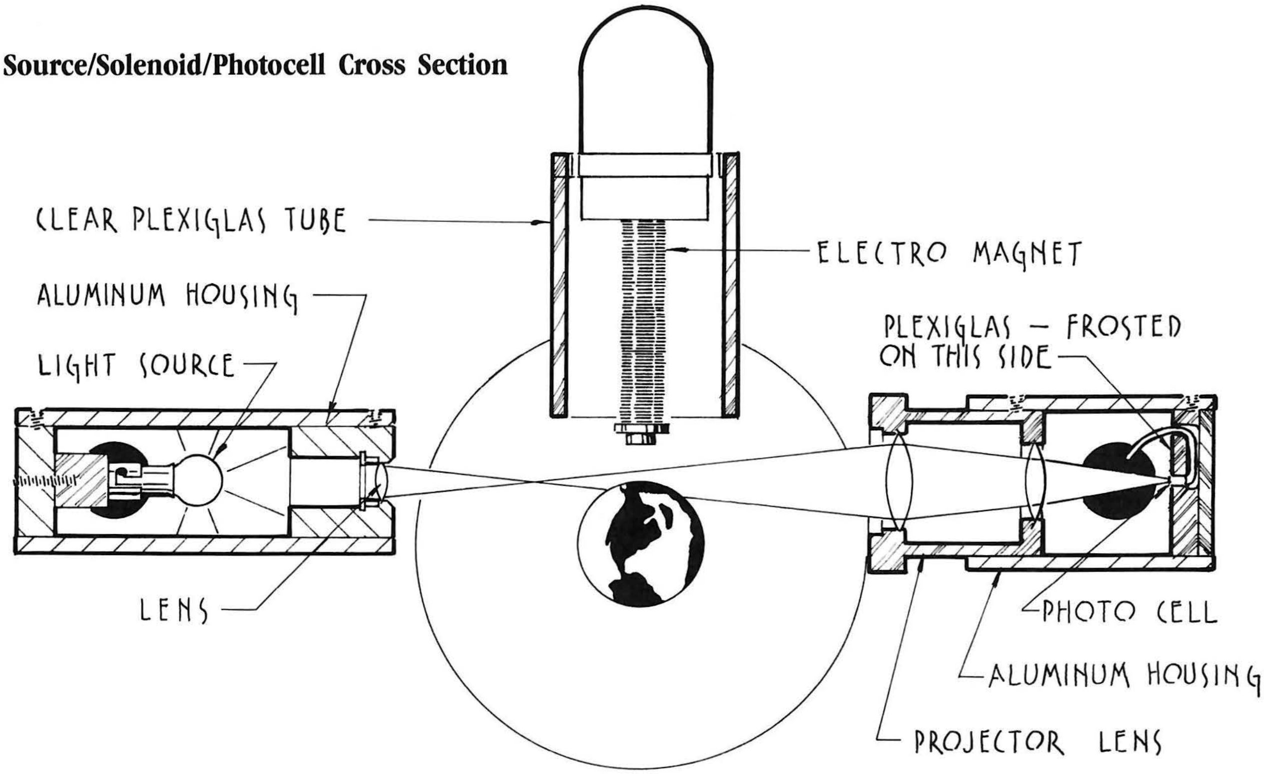

The electromagnet is wound on a 2 3/4'' by 3/8'' diameter iron rod. Brass flanges are soldered to the ends of the rod making a spool on which to wind the coil. The coil has about 1300 turns of #22 wire (12 ohms resistance). It is important to wind the coil on a long rod to cut down on the heat buildup in a multi-layer spool. As the coil heats, its resistance changes, thus affecting the feedback loop. A long coil cools more efficiently and makes the circuit more stable. Because the coil becomes uncomfortably warm, we have surrounded it in a 2 1/4'' ID plexiglas tube (you can still stick your finger inside the tube to feel the coil). When the globe is held so high that the current shuts down completely, some residual magnetism remains in the iron rod. To keep the globe from sticking to the magnet in this case, we glued a 1/16'' thick rubber pad to the end of the iron rod, which provides just enough distance between the two.

The electronics consist of the power supply, photocell and amplifier, and the electromagnet driver circuit. All are as per the schematics in this recipe; we have included a printed circuit board layout for the main electronics (not including power supply).

We have added a button to the exhibit that increases the gain of the electromagnet in the feedback loop and causes the globe to overshoot, so that it becomes increasingly unstable and finally drops into the padded tray below.

Circuit Description:

The light is detected by an MRD300 phototransistor in a common emitter configuration. The 741 is a gain stage. You can think of it as having a DC gain set by the ratio of resistors R_1 and R_2 and an AC gain set by the ratio of capacitors C_1 and C_2. Both of these gains must be adjusted be adjusted separately to achieve stability. The values shown work well with our physical setup. Since yours will be different, you will probably have to tweak these values. The 5561 takes the feedback signal from the

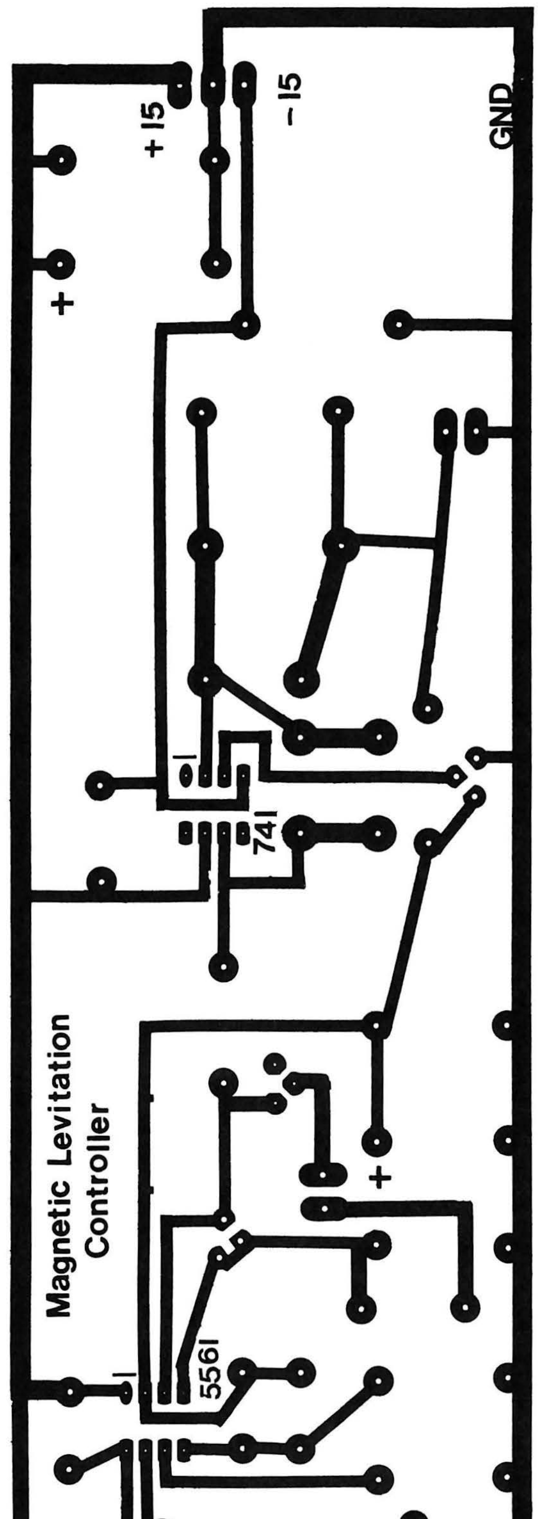

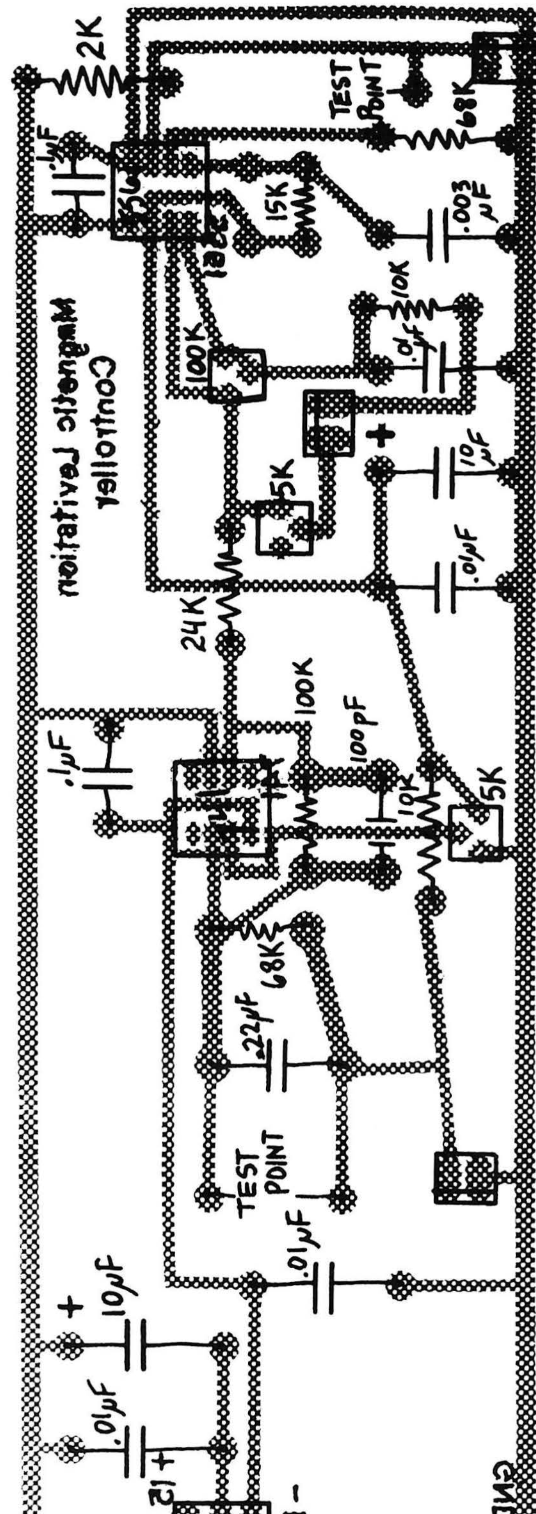

COMPONENT SIDE

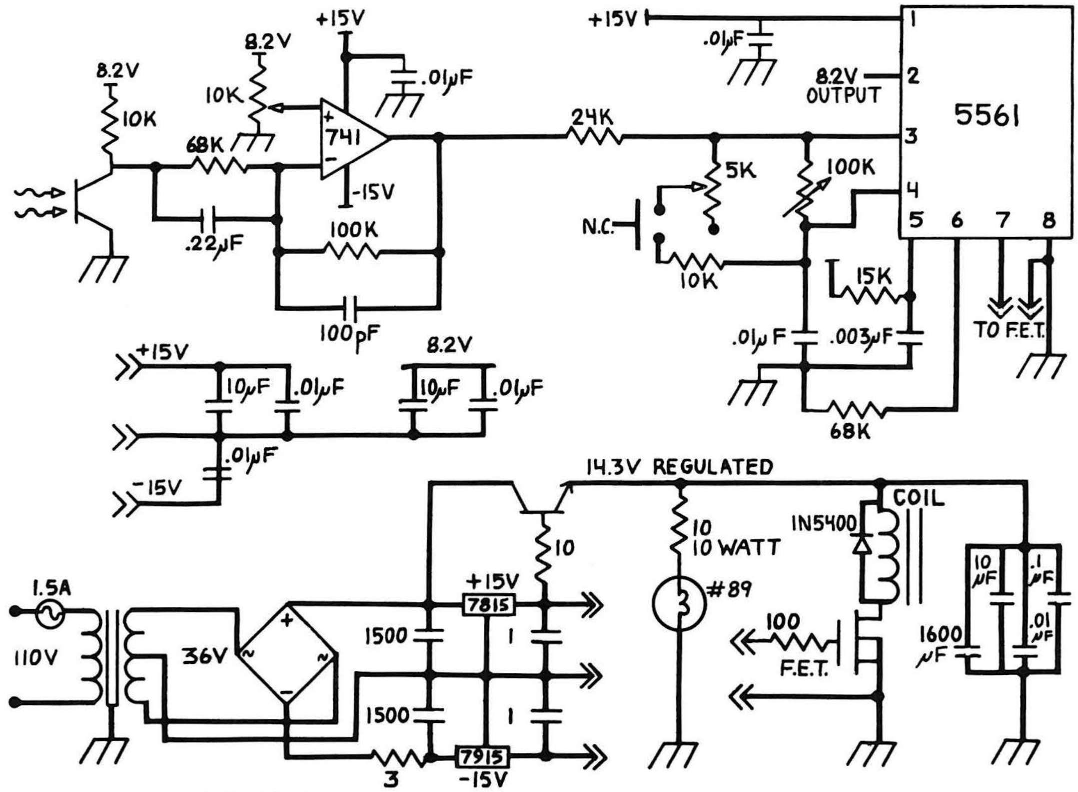

ALL RESISTANCES IN OHMS

741, boosts it according to the trimpot setting, and converts it to a pulse-width-modulated signal. This switched scheme keeps the power dissipation in the coil drive transistor at a minimum and allows that transistor to run cool. The coil drive and lamp voltage are regulated as these affect the overall loop gain.

There are three main things to adjust—one electrical and two mechanical—to get the exhibit running. All adjustments are interrelated, so go through this procedure twice for optimum performance. The procedure must be performed after the coil is warm (power it up without anything in the light path for 15 minutes).

1) Feedback reference and gain:

Connect an oscilloscope to the FET gate drive and adjust the sweep to observe the duty cycle of the 20kHz pulse-width-modulated drive signal. Alternately block and unblock the light with the globe. Adjust the offset and gain trimpots so that the gate drive just barely reaches full on and full off levels.

2) Photocell focus:

The lens should normally be held in place with a set screw. Loosen this set screw. This adjustment affects the stability of the globe. Find optimum stability by tapping the globe gently while slowly running the lens. in and out. With our exhibit, the optimum setting throws a circle of light about 3/8'' diameter on the MRD300 (the actual focal point is behind the photocell).

3) Coil height:

Remember that the coil must be preheated. Loosen the set screws or whatever you've provided for adjustment, so that the coil support arm is free to slide up and down. Suspend the globe. Adjust the coil height so that when the globe is stable, the coil drive duty cycle is approximately 60%. If this is not done properly, the coil will be unable to support the globe when it heats up.

The earth globes are about 1 5/8'' in diameter and are made of thin steel sheet metal. They are available from:

Accoutrements
P.O. Box 30811
Seattle, WA 98103
telephone: (206) 633-0424

Critique and Speculation

This is a fascinating and popular exhibit; some folks enjoy it so much that they take a souvenir globe home with them. We lose one or two globes a week, but they're quite cheap and don't impose much financial burden on the museum.

Other things can be suspended with this type of device. We had wrenches and screwdrivers hanging in mid-air when it was in the shop. You may find objects that are more appropriate for your location. Keep in mind, though, that the lighter the object, the farther below the electromagnet it can be suspended. Experiment!

Though we haven't done so on our exhibit, we think it would be wise to ventilate the electromagnet to keep it from getting too hot.

Exploratorium Exhibit Graphics

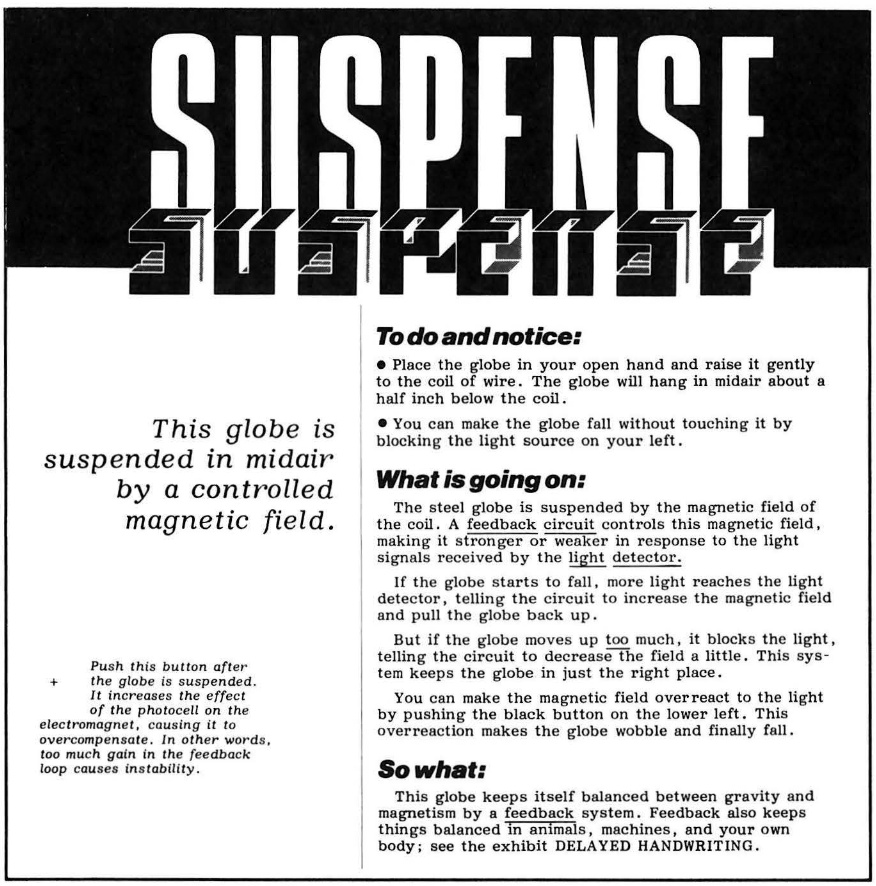
SUSPENSE

SUSPENSE

This globe is suspended in midair by a controlled magnetic field.

Push this button after the globe is suspended. It increases the effect of the photocell on the electromagnet, causing it to overcompensate. In other words, too much gain in the feedback loop causes instability.

To do and notice:

- Place the globe in your open hand and raise it gently to the coil of wire. The globe will hang in midair about a half inch below the coil.
- You can make the globe fall without touching it by blocking the light source on your left.

What is going on:

The steel globe is suspended by the magnetic field of the coil. A feedback circuit controls this magnetic field, making it stronger or weaker in response to the light signals received by the light detector.

If the globe starts to fall, more light reaches the light detector, telling the circuit to increase the magnetic field and pull the globe back up.

But if the globe moves up too much, it blocks the light, telling the circuit to decrease the field a little. This system keeps the globe in just the right place.

You can make the magnetic field overreact to the light by pushing the black button on the lower left. This overreaction makes the globe wobble and finally fall.

So what:

This globe keeps itself balanced between gravity and magnetism by a feedback system. Feedback also keeps things balanced in animals, machines, and your own body; see the exhibit DELAYED HANDWRITING.

Related Exploratorium Exhibits

Electrically Induced Magnetic Fields

Motor Effect; Adjustable Plaything; Eddy Currents; Ring Toss; Transformer; Very Slow Electric Oscillations.

Feedback

Albert; Balancing Stick; Muscle Stretch; Pitch Switch; Selective Hearing; Color Reversal; Hysteresis Motor; Recollections; Cheshire Cat; Pupil; Lunar Lander.

Magnetic Fields & Forces

Magnetic Tribbles; Stripped Down Motor; Daisy Wheel Dyno; Sand Sorter; Visible Magnetic Domains; Curie Point; Giant Meter; Magnetic Light Sorter; Air Track; Shaded Pole Motor I & II; Electric Pendulum; Black Sand; Magnetic Tightrope.

Oscillation

Adjustable Plaything; Air Track; Drawing Board; Harmonic Series Wheel; Relative Motion; Sidebands; Vibrating String.

Transformer

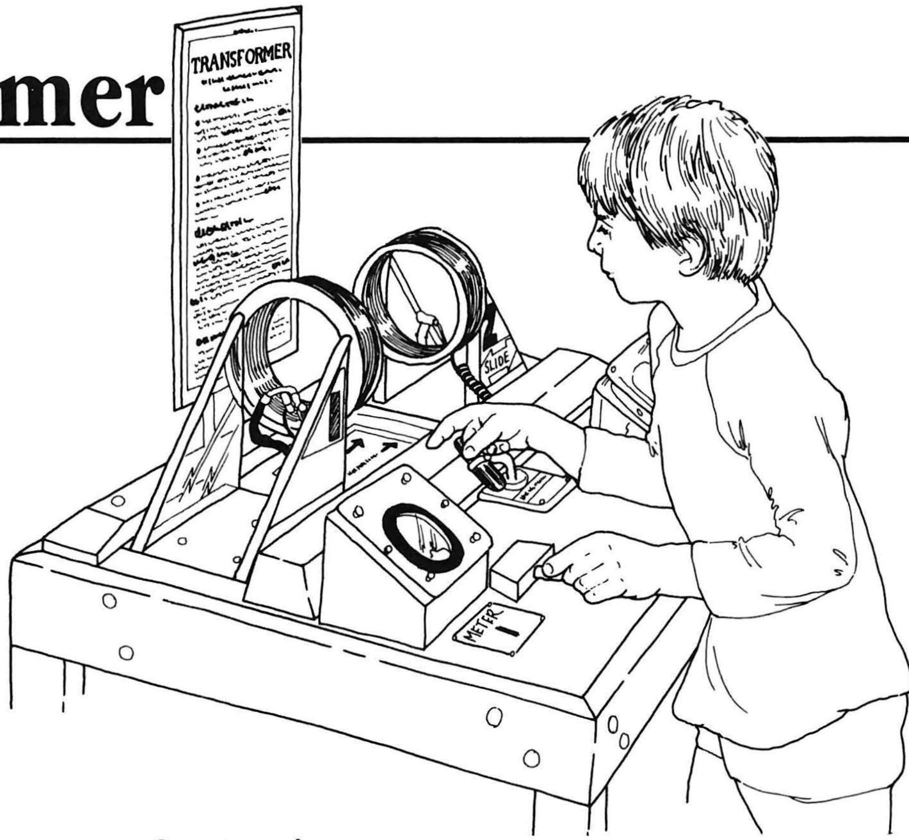

Description

This exhibit demonstrates the workings of a transformer. Many people believe that you simply put electricity into one end of a transformer and take it out of the other end. But the electric current actually undergoes two transformations: first, it's changed from an electric current to a magnetic field; and then it's changed back again from a magnetic field to an electric current. The exhibit also shows that one can only transform alternating current, not direct current, since the secondary coil only responds to a changing magnetic field. The visitor changes the magnetic field by either switching the direct current in the primary coil on and off, or by leaving the current on and sliding the secondary coil into and out of the primary coil's magnetic field. We also hang a regular bar magnet on the exhibit which the visitor can move into and out of the secondary coil; this produces the same response as using the primary coil, demonstrating the equivalence of the magnetic fields in an electromagnet and a permanent magnet.

Construction

This is a fairly simple exhibit to build. It consists of the two coils, meters to measure the current in both, and a power supply for the primary coil.

Our coils are wound on spools made out of plexiglas tubing with circular flanges glued to the ends to hold the windings in place. Note that the spools can be made of other non-ferromagnetic materials (our original spools were wood, but plexiglas is better because the visitor can see that we aren't hiding anything). Our coils are 6'' in diameter and 2'' wide, and are wound with 18 gauge wire. By measuring the resistance of our coils, I've been able to estimate, roughly, the number of windings in each; the primary coil has about 400 turns, while the secondary has about 200 (this is curious since our coils look identical). I'd recommend you start with around 300 on each of yours.

The primary coil is fixed in place on the left side of the table. It has a power supply that will supply up to 3 amps. The power supply is controlled by a lever on the table top which turns a large potentiometer below the table. The lever is spring-loaded (below the table) so that it returns to the OFF position when released. This keeps the coil from overheating. An ammeter displays the current in the coil.

Unlike the primary coil, the secondary coil is free to slide from side to side in a wood track, with teflon runners for ease of movement on the masonite table top. It is attached to its meter with a telephone handset coily cord. This meter is a center-zero 50 micro-amp full scale meter (the generated current is rather feeble); a center-zero meter is important here since the current flows both ways in the secondary.

A cow magnet is steel-cabled to the table top. (Cow magnets are very

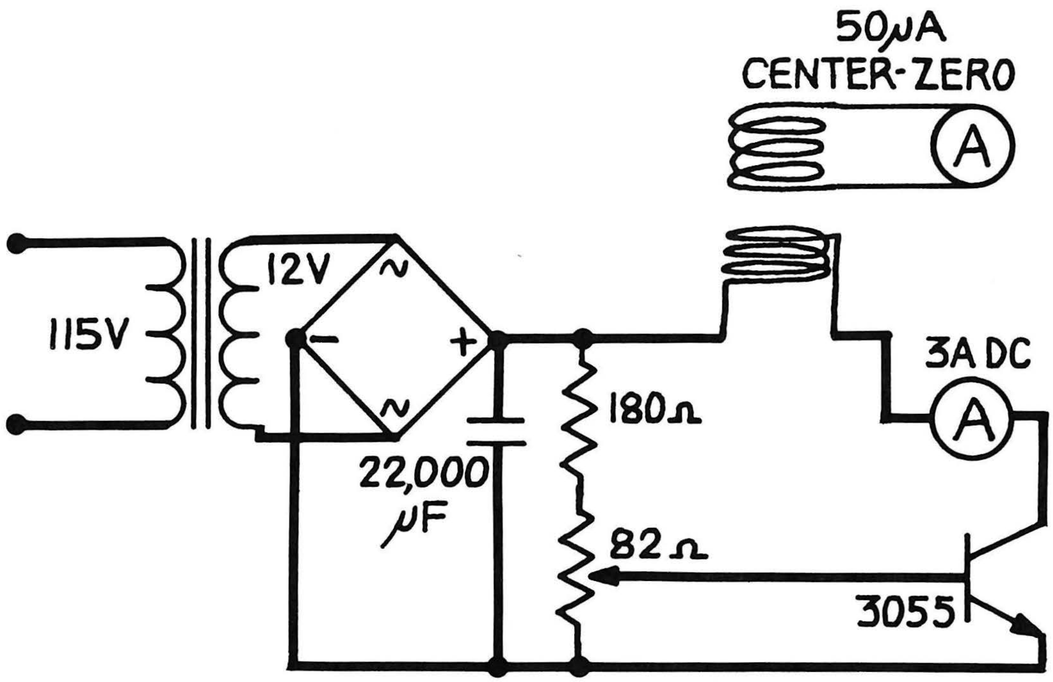

good "alnico" magnets placed in the first stomach of cows to keep nails, barbed wire, and staples that the cow might eat from entering the digestive tract. This results in "hardware disease" which can be fatal to the cow.) Fortunately for us these are very strong and relatively cheap magnets that can be used in many exhibits. These and just about any kind of magnet you can dream up are available from:

Dowling Miner Magnetics Corp.
21707 Eighth Street East
Sonoma, CA 95476
telephone: (707) 935-0352, or in California, (800) 535-4471

Dowling is also a good source for magnets that you can sell in your museum shop and even has an educational magnet kit available. Talk to Mr. Niels Chew for information.

Critique and Speculation

It would be nice to have a compass mounted in the center of the primary coil that would show the generated magnetic field. The compass could also be mounted on a brass chain or nylon cord and fixed to the table (steel cable would attract the needle).

Related Exploratorium Exhibits

Electrically Induced Magnetic Fields
Motor Effect; Adjustable Plaything; Eddy Currents; Ring Toss; Transformer; Very Slow Electric Oscillations.

Magnetically Induced Electric Fields
Generator Effect; Stripped Down Motor; Pedal Generator; Automotive Ignition; Slow Motion Switch; Electric Pendulum; Induction; Shaded Pole Motor I & II; Hertz Resonator.

TRANSFORMER

A changing magnetic field can create an electric current.

To Do and Notice

Slide the coils apart. Move one end of the magnet towards and away from the center of Coil 2. Meter 2 jumps, showing that the moving magnetic field has created an electrical current in the coil. (Try each end of the magnet.)

Slide the coils together and turn on the brass switch. Meter 1 shows that an electric current is being sent through Coil 1. This current makes Coil 1 into an electrical magnet, or electromagnet.

Turn the brass switch on and off and watch Meter 2. The meter jumps one way when you create a magnetic field, and jumps the other way when the field disappears. When the field is steady, Meter 2 returns to zero.

Turn the switch on and hold it. Slide Coil 2 back and forth. Notice that Coil 2 develops current only when the coil is moving through the magnetic field.

What is Going On

Coil 2 is not connected to Coil 1, nor to any other external source of electricity. It develops its own electric current whenever it experiences a changing magnetic field.

You can create a changing magnetic field in Coil 2 by moving the bar magnet, by changing the magnetic field in Coil 1, or by moving Coil 2 itself towards or away from the field in Coil 1. Any one of these changes in the field will create an electrical current in Coil 2. No current is produced if the magnetic field is unchanging: the field must be either increasing or decreasing. The faster the field changes, the greater the current it produces in Coil 2.

Decreasing magnetic fields can create current just as well as increasing fields. Thus, when you turn Coil 1 on and off, Meter 2 shows equal but opposite currents.

So What

Only a changing signal can pass between the coils of a transformer. A transformer can therefore be used as a kind of filter, which blocks steady electric signals and lets changing signals pass. Your telephone uses a transformer in this way.

Recipe No. 155

Very Slow Electric Oscillations

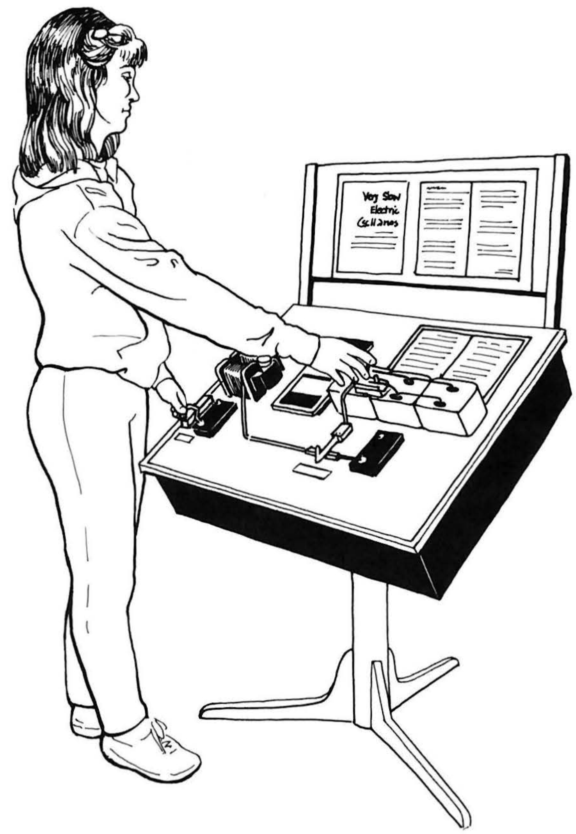

Description

Several different phenomena are demonstrated here. First and foremost, one can see very graphically how energy in an LC (inductance-capacitance) circuit oscillates back and forth between electric and magnetic fields in the capacitors and inductor. The oscillations can be started in two ways. One is to "fill" the capacitors with charge from a battery (DC source). When the capacitors are reconnected to the inductor, the oscillations begin. The other way is to introduce a magnetic field into the inductor with a small secondary winding hooked to a DC source through a switch. Both the voltage across the capacitors (an indication of the stored electric energy) and the current in the circuit (an indication of the stored magnetic energy) can be observed on large meters. A small compass is mounted on the inductor core as an additional visual indicator of the magnetic field.

To see that the rate of oscillation depends on the amount of charge stored in the capacitor, one can throw a switch to add two extra capacitors in the circuit, thereby slowing the oscillation.

Since there is resistance in the circuit, the oscillations die out, demonstrating the exponential nature of a naturally decaying system; the rate of decay of the current in the circuit depends on its magnitude.

Construction

Although it's not difficult to build, some of the components in this exhibit might be hard to find. You will need a large inductor (ours is about a 200 Henry), a few capacitors, current and volt meters, and the miscellaneous switches, DC power supplies, and other parts.

Our inductor was wound on a large laminated transformer core. To get enough inductance, there are two separate coils which were wired in series (see schematic and diagram of the exhibit). Unfortunately, the exhibit was built so long ago that we have no idea how many windings of wire are on each spool. If you build the inductor this way, be sure to get the polarity on the coils correct, or they'll fight each other to a standstill, and you'll end up with a zero Henry inductor no matter how many windings you use!

The inductor is hooked to the rest of the circuit as shown in the schematic. We used 3 separate capacitors with a knife switch that allows people to disconnect 2 of them from the circuit. The SPDT switch that alternately connects the capacitors to either the power supply or the inductor was made so that it is normally spring-loaded to the inductor position (see diagram). The switch consists of a simple stainless steel sheet metal leaf, pre-bent to the desired position. (Spring steel should work fine, except that you'll have to make sure that it conducts electricity well—

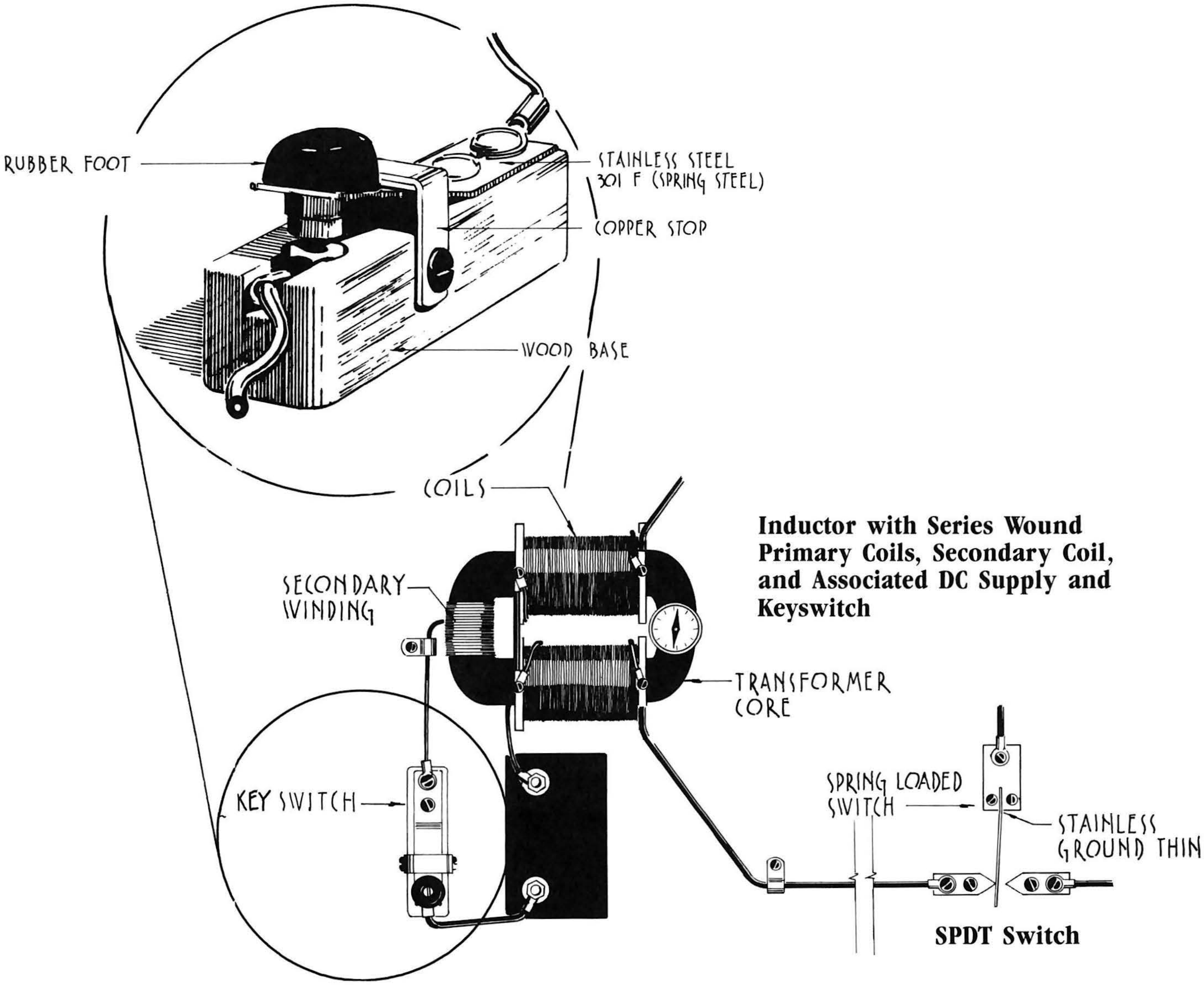

Inductor with Series Wound Primary Coils, Secondary Coil, and Associated DC Supply and Keyswitch

SPDT Switch

some spring steel has an insulating oxide layer.) To distribute the strain in the leaf, it is ground thin over a small area just below the clamp block (again, see diagram).

The volt meter and the current meter both have simple amplifiers on them to make the needle deflections large and readable. The schematics for these amplifiers are given below.

The LRC circuit can be stimulated with a small secondary winding around the transformer core, hooked to a power supply through a telegraph-style switch. There are about 30 windings in this coil.

Both power supplies (you could use a single supply under the table) are 7 volt DC supplies.

All wiring for the exhibit is done on top of the table. We used brazing rod, which is fairly stiff and can easily be fixed to the table top with cable clamps. The wires do disappear below the table at the meters. It is important to show the wires, so that the public knows that the exhibit is hooked up just as it says in the accompanying graphics.

As an additional indicator of current in the inductor, we have attached a compass to its core. The compass needle swings to and fro as the current oscillates back and forth in the circuit. Use a compass whose needle is free to move fairly rapidly—a liquid-filled compass may be too sluggish to respond to the changing magnetic field. You might also experiment to find the best placement for maximum effect.

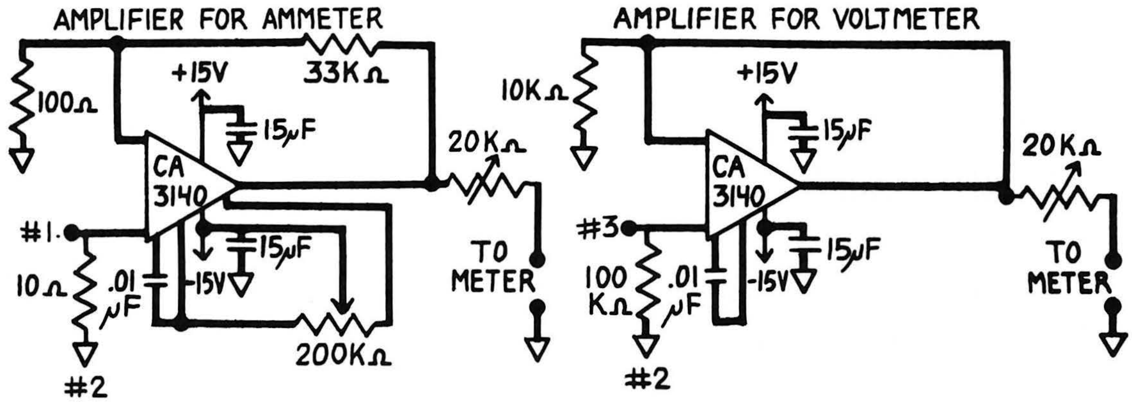

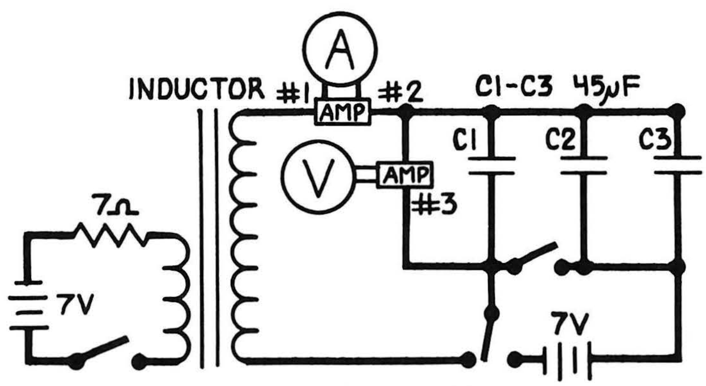

1MΩ INPUT IMPEDENCE
ON VOLT METER
BOTH METERS ARE CENTER-ZERO WITH NO SCALE INDICATION

Critique and Speculation

This is a fairly reliable exhibit. The only trouble spot has been the knife switch on top of the capacitors. Small knife switches are, by their nature, fairly delicate. Sometimes the contacts get spread too wide and must be repaired and sometimes the entire switch is destroyed (usually not intentionally). If you have a better design, use it, but try to keep what's happening as clear as it is with the knife switch (it's very obvious how this type of switch works, making it the pedagog's choice).

Related Exploratorium Exhibits

Charge Separation
Corona Motor; Electrical Analogy; Electrical Fleas; Electrostatic Generator I-III; Energy vs. Power; Finger Tingler; Pluses and Minuses; Giant Electroscope; Argon Candle.

Electric Capacity
AM Lightning; Automotive Ignition; Theremin; Fading Zone; Hertz Resonator; Slow Charge/Slow Discharge.

Electric Current
Daisy Dyno; Giant Meter; Ohm's Law; Pacific Gas & Leather; Pedal Generator; Fluorescent Tube; Hand Battery; Induction; Shaded Pole Motor I & II; Tube Amplifier; Voltage Divider; Votage Drop; Electrical Pendulum; Hot Effects; Iron Sparks.

Oscillation
String Analogy; Vibrating String; Harmonic Series Wheel; Sidebands; Phase Pendulum; Kettle Drum; Pendulum Table; Visible Effects of the Invisible; Aeolian Harp; Bells; Bronx Cheer Bulb; Air Track; Adjustable Plaything; Hot Effects; Suspense; Chaotic Pendulum; Electric Pendulum; Drawing Board; Sound Column.

ELECTRICITY

Very Slow Electric Oscillations

In this exhibit, electrical energy is transformed into magnetic energy and back again.

To do and notice:

Hold SWITCH 1 to the right (charge). The battery sends an electrical charge to the three blue capacitors at the upper right. Notice the rise of the voltage meter.

Release SWITCH 1 and notice that the voltage and current oscillate back and forth until they finally die out. The little compass by the magnet also moves back and forth as the current oscillates.

Press SWITCH 2. Current from a different battery flows through the electromagnet on the left side of the inductor coil, creating a magnetic field. This field gives magnetic energy to the inductor coil, starting up the same oscillations.

When you release SWITCH 2, the electromagnet's field disappears. But the disappearing magnetic field creates a new current in the inductor coil, and the oscillations start up once more.

Try making oscillations when the KNIFE SWITCH on the top of the capacitors is open, and when it is closed. If the KNIFE SWITCH is closed, you charge all three capacitors; If it is open, you just charge one.

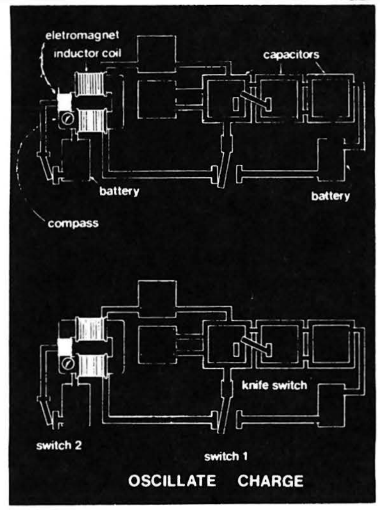

What is going on:

In these oscillations , energy moves back and forth between two forms: magnetic energy and electrical energy.

Starting with Electrical Energy

When SWITCH 1 is on charge , electrical energy from the battery charges the capacitors. The capacitors store this energy in an electrical field.

Electrical into Magnetic Energy

When SWITCH 1 returns to oscillate, the capacitors' stored electrical charge flows in a current, travelling through the current meter and on through the inductor coil. This coil is the transforming agent. It transforms the electrical energy carried by the current into magnetic energy. The magnetic energy in the coil reaches its highest point just when the electrical energy in the capacitor is all used up.

Magnetic back into Electric

Now, with the electrical energy all used up, the current stops flowing, and the magnetic field begins to collapse. But the inductor coil transforms this collapsing field back into electrical energy, which continues travelling through the circuit. This energy charges up the capacitor, but in a way opposite to its original charge: the side of the capacitor that was originally negative is now positive. The needle on the voltage meter swings to the left, indicating a reverse charge. The electrical energy stored in the capacitor reaches its highest point just when the magnetic energy is all used up, and the whole process repeats in reverse.

By pressing SWITCH 2, you start the oscillations with magnetic energy: lift this flap to find out how.

Closing the KNIFE SWITCH includes two additional capacitors in the circuit.
The three capacitors hold a greater amount of charge than the single capacitor does. The greater charge takes more time to flow into and out of the capacitors, and so the oscillations slow down.

The oscillations die out because of resistance in the circuit. As the current encounters resistance, it gives off some of its energy to heat, which is then dissipated to the surrounding air.

So what:

Circuits very much like this one are used to make more rapid electrical oscillations, or — at even higher frequencies — the waves which transmit radio, TV, and radar signals.

Capacitors

Some materials, called conductors, let electrical charges move through them. Others, called insulators, block the flow of electricity. The three capacitors are like sandwiches, made of two conducting sheets with a sheet of some insulator in between. (A sandwich of wax paper between two sheets of aluminum foil is a simple capacitor.) When you press SWITCH 1 to charge, one sheet of the capacitor is charged negatively, and the other is charged positively. The negative charges are attracted to the positive sheet — but they can't reach it, because the insulator is in the way. The insulator, by holding apart the mutually attracting charges, stores their potential energy in an electric field.

Oscillation

When SWITCH 1 is at oscillate, it makes a bridge over which the negative charges can move out of the capacitor and through the wires, to reach the positive sheet. The charges flow in a current. The path of the current is called the circuit, and this circuit leads through the current meter and the inductor coil.

Whenever a current flows through a coil of wire, it creates a magnetic field (see the exhibits CIRCLES OF MAGNETISM, I-IV). Electrical energy from the capacitors is thus transformed into the magnetic energy of the field. If this coil is wrapped around an iron core, the magnetic effect is greatly increased.

When all of the capacitor's electrical energy has been used up, the current stops flowing, and the magnetic field begins to collapse and disappear. But the collapsing magnetic field creates an electrical force in the copper wire of the inductor coil. This force produces a current, which continues on from the coil, giving the capacitor a charge opposite to its original charge. When the magnetic field is all gone, the capacitor is fully charged, and the whole process repeats in the opposite direction.

Starting with Magnetic Energy

You can start the same oscillations with magnetic energy, by pressing SWITCH 2. This switch allows current from the battery to flow into the electromagnet, creating a magnetic field: and the energy of this field is transmitted, through the shared iron core, to the inductor coil. This magnetic energy then begins the oscillations, as the electrical energy did before.

When you release SWITCH 2, the collapse of the electromagnet's field produces a new current in the inductor coil, and the oscillations start up again.

(See: TRANSFORMER)

Watt's the Difference

Description

Watt's the Difference elucidates the concept of electrical power by showing the relationship between voltage and current. The visitor adjusts two lamps to the same brightness and observes that power meters on each read the same. Upon further examination, the visitor notices that the voltage on one lamp is 10 times that on the other, while the current on the first is only 1/10 that of the second. Some quick arithmetic reveals (and the graphics point out) that the power (in watts) is equal to the voltage times the current. The exhibit invites the visitor to do calculations based on the above observation—a solar powered calculator is even provided.

Construction

On the surface this exhibit looks like two identical sets of meters, knobs, and light bulbs. Each set does contain a light bulb, current meter, voltage meter, and power meter; yet although they look identical, they are different in that one side has a 12 volt bulb and the other a 120 volt bulb. The knob on the 12 volt side only turns about 30 degrees, while the knob on the 120 volt side turns its full 270 degrees. To differentiate the sides, the panel is divided in half, using two different colors of formica.

To save people from being overwhelmed by an exhibit with six meters, we decided to make the voltage and current meters digital while recording the power with a a traditional analog meter. The volt meters have a range of 0 to 2 volts, while the current meters read from 0 to 200 millivolts. They are fairly inexpensive and are available from:

Texmate, Inc.
348 South Cedros Ave.
Solana Beach, CA 92075
telephone: (619) 481-7177

Input Conditioning Circuitry

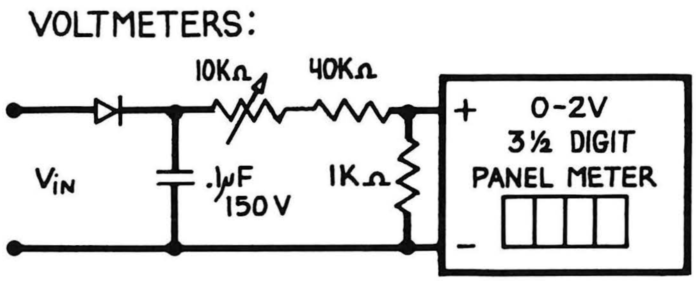

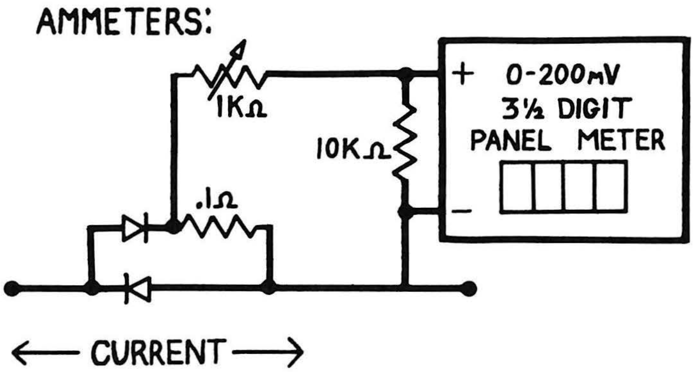

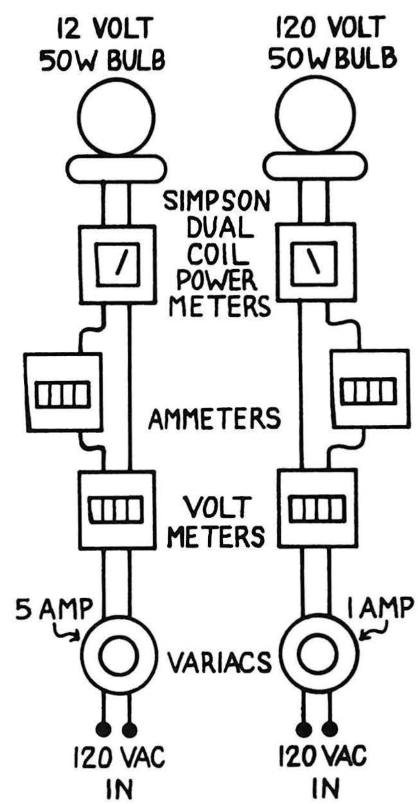

Exhibit Block Diagram

These meters have large, easy to read digits, but otherwise there's nothing special about them, so feel free to substitute any meter you wish. To bring the signals to the proper levels for the meters, the simple circuits (see diagram) are connected to the inputs of the digital meters.

The power meters are standard Simpson watt meters. The meter on the 120 volt side is used in the standard configuration, but we had to modify the meter on the 12 volt side. There is a resistance in series with the moving (voltage) coil that made the impedance too high. This resistance was removed and a 1k Ohm trimpot was added externally for calibration purposes. This change seems to have made the meter more sensitive to temperature changes.

The meters must occasionally be tweaked so that the numbers on their faces agree with the power meter. This is done via the trimpots on the meter input conditioning circuitry.

The knobs on the front of the exhibit turn variacs that control the voltage to the bulbs. The 12 volt side uses a 5 amp variac and the 120 volt side uses a 1 amp variac (remember the low voltage side is the high current side!). Since both of these are 120 volt variacs, some method is needed to keep the visitor from turning the 12 volt side above 12 volts and burning the bulb out. We have chosen the rather simplistic approach (which we don't really recommend) of tying one end of a string to a long bolt fixed to the non-rotating part of the variac and the other end of the string to the rotating brush assembly; the string is tied at such a length that the variac can only be turned up to 12 volts. The string is held between two nuts on the stationary bolt, so that we can fine adjust it simply by moving the nuts up and down along the bolt.

All electrical devices are locked securely under the top of the exhibit in an enclosed case (you can't let 120 volt stuff hang off of the bottom of exhibits). The variacs produce some waste heat, so be sure to ventilate the exhibit case with holes bottom and back.

The lamps (one 120 volt and one 12 volt) are placed in light fixtures on top of the table. These fixtures have white spherical diffusers which make it much easier to compare the relative brightnesses of the bulbs as the power is varied.

Above the exhibit is a plexiglas case with cut-away examples of each type of light bulb. We cut openings in the bulbs with a diamond saw while holding each bulb in a lump of clay. Good luck if you try this—we lost several bulbs in the process.

Related Exploratorium Exhibits

Electric Capacity

AM Lightning; Automotive Ignition; Theremin; Fading Zone; Hertz Resonator; Slow Charge/Slow Discharge.

Electric Current

Daisy Dyno; Giant Meter; Ohm's Law; Pacific Gas & Leather; Pedal Generator; Fluorescent Tube; Hand Battery; Induction; Shaded Pole Motor I & II; Tube Amplifier; Voltage Divider; Voltage Drop; Electrical Pendulum; Hot Effects; Iron Sparks.

Electric Resistance

Carbon Filament; Carbon Microphone; Short Circuit; Bulbs & Batteries; Slow Motion Switch; Fading Tone; Ohm's Law; Finger Tingler; Hot Effects; Energy vs. Power; Induction; Slow Charge/ Slow Discharge; Giant Electroscope.

Exploratorium Exhibit Graphics

Watt's the Difference?

To do and notice:

- Adjust the knobs to make the two bulbs glow equally brightly.
- See if the WATT meters readings agree.
- Notice that the voltage of the left bulb is only one-tenth that of the right bulb. The current is ten times greater.
- Multiply the voltage times the current for either bulb and see if the answer agrees with the power meter reading.

What is going on:

This exhibit uses a special low voltage bulb along with an ordinary bulb. When they are adjusted to be equally bright they use equal amounts of electric power.

A WATT is a measure of electric power. One WATT equals one VOLT times one AMP. Different combinations of voltage and current give the same power:

40 WATTS = 10 VOLTS x 4 AMPS

or 40 WATTS = 100 VOLTS x .4 AMPS

So what:

The electric companies do not sell electricity, they sell power. The power is transmitted by means of electricity. The same amount of power can be delivered by high voltage at low current or by low voltage at high current.

High voltage increases shock hazard. Why doesn't electric power come to your house at a lower voltage? Large currents cause the wires to heat up and the danger of fire is increased. In the United States electric power is delivered to homes at 120 volts. This is a compromise intended to minimize the danger of fire as well as shock.

Zero to Sixty

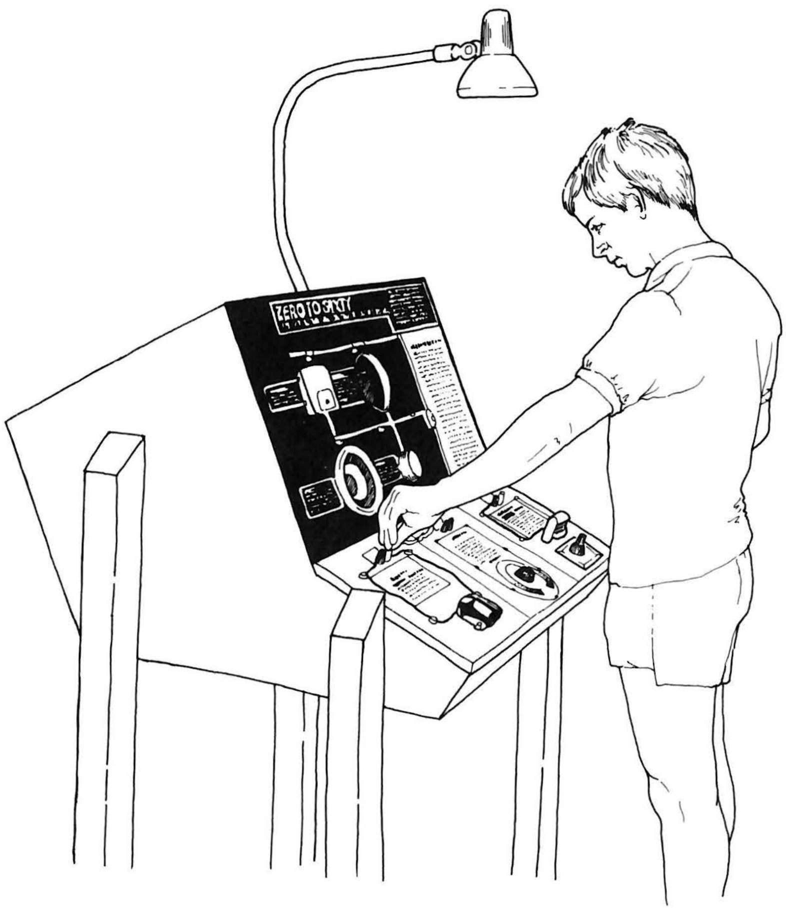

Description

With this exhibit you can play with low voltage DC and AC currents, observing their effects on lamps, meters, speakers, and an oscilloscope. Three voltage sources are available: DC batteries, a step-down transformer which delivers 60 Hz, and a variable 0 to 60 Hz source.

Construction

The exhibit can be divided into two parts: things to plug in (electric devices) and things to plug into (voltage sources). The former are all mounted behind a smoked plexiglas faceplate, and are wired in parallel to a single plug, which can be connected to any of the three sources. The wiring to the four devices is surface mounted with cable clamps right up to the device, at which point the wires insert through holes in the plexi and connect to their respective destinations. The four devices are:

1) A center-zero meter that can show both positive and negative voltage. This is a +/− 4 volt meter—you may have to adapt a smaller volt meter to suit your situation.

2) A 4" diameter acoustic suspension speaker. We use this type of speaker because it can make large excursions, so it's easy to see when it moves. A circular plexiglas shield mounted on 1/2" spacers above the speaker protects the cone from damage.

3) A flashlight—actually only the front is used; it's a familiar device that most people can relate to.

4) The oscilloscope sits on a shelf behind the smoked plexiglas. Ours is a Tektronix model 504—you can substitute any suitable oscilloscope.

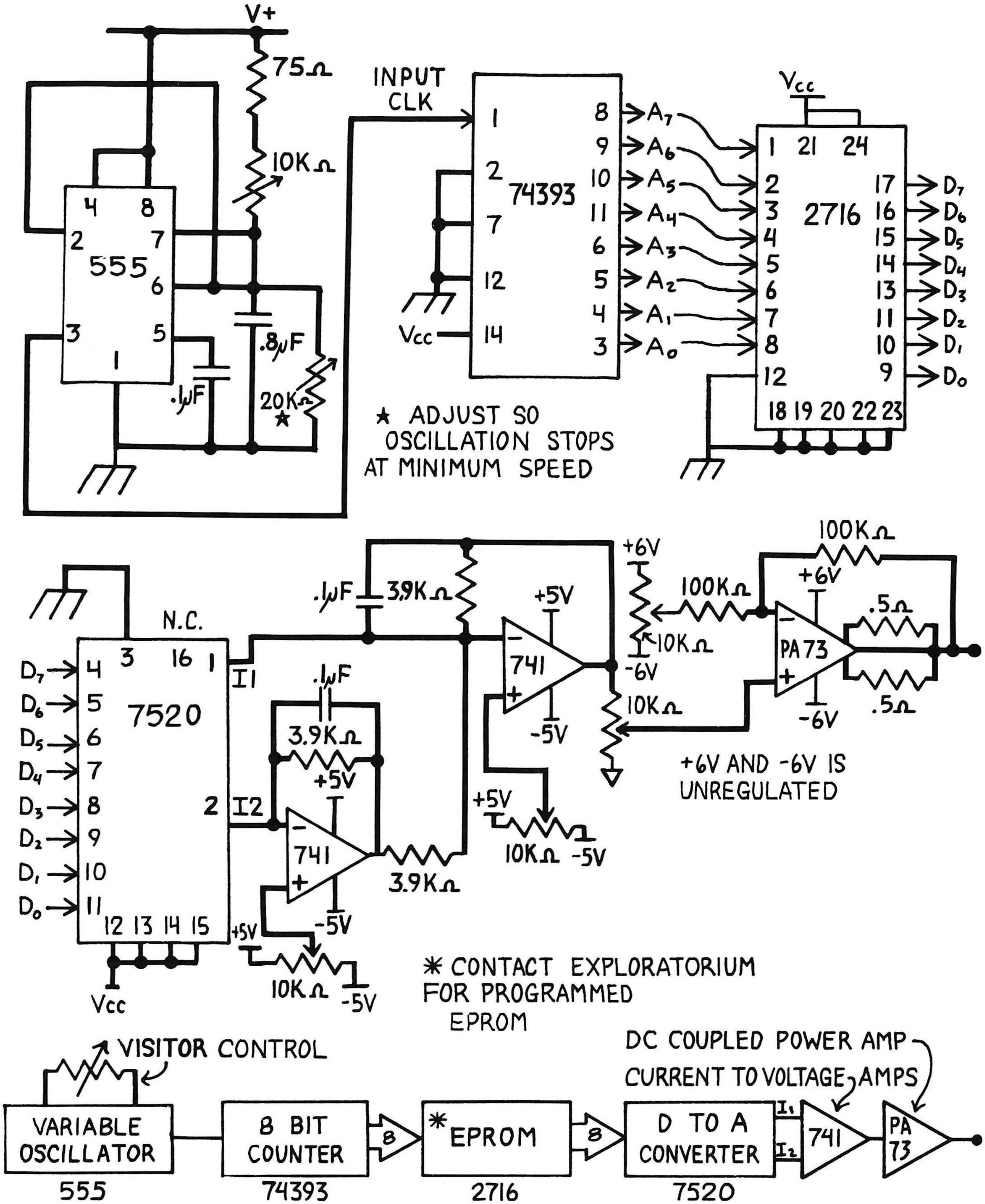

Variable Frequency Oscillator
Block Diagram & Schematic

We set it for a horizontal scan rate of 20ms/div and vertical deflection of .5V/div. The sight of an oscilloscope with all of its complicated controls can be quite intimidating to someone not familiar with it (and most of our visitors aren't), so we used smoked plexi to cover everything except the CRT. Unfortunately, you can't see the controls at all this way—and we hate hiding anything from those who are curious—so we've illuminated the oscilloscope knobs with an F6T5 fluorescent bulb. It's bolted in a vertical position to the back of the plexi and placed just to the right of the scope. A small sheet metal shield, mounted just in front of the bulb, blocks light from coming directly through the plexi. The lighting achieves a nice balance—if you're curious, you can see the oscilloscope controls, but it's also easy to ignore them.

The wires (12 gauge stranded—you may want to substitute test lead wire) leave the top panel through a split-block plexiglas clamp. They pass through a short length (about 5'') of vinyl tubing in the clamp—which provides strain relief and keeps the wires from being bent in too small a radius—and terminate at a double banana plug, which fits into outlets at each of the power supplies. The top panel (the smoked plexi) is hinged on top and swings out and up; it can be held in the open position with a prop-rod. You can't open this panel without first opening the locked lower panel, on which all of the power supplies are mounted.

Three power supplies are provided:

1) Direct Current—From the top, this looks like two D cells wired in series and then connected to a set of binding posts. Current is actually supplied from below, using a standard power DC power supply connected to the same set of binding posts. This is one of the few places in the Exploratorium where we decided to ''fool'' the public for our own convenience; we figured that since the batteries do the same as the power supply, it was okay to fake it a little here.

2) AC/DC variable frequency supply—This supply presented us with a nasty design problem because we wanted the visitor to be able to vary the frequency from 60 Hz to 0 Hz and be able to stop the sine wave at any point, holding a constant voltage at that point. To do this we digitized a sine wave into 256 points, and stored the digitized binary numbers into an EPROM (Erasable Programmable Read Only Memory). We use a variable (and stoppable) frequency clock to make a binary counter cause the digitized sine wave to be output into a digital-to-analog converter (to translate the numbers back into a voltage again), and from there to an amplifier which drives all of the devices on the top panel (see schematic). The output of the amplifier is fed to a pair of binding posts.

3) Alternating Current—A 12.6 volt Radio Shack filament transformer is mounted to the top of the table and plugged into a wall outlet also mounted to the table. For safety reasons, the outlet is fed with 41 volts from a transformer below the table, and the second transformer converts this to about 3 volts. Wires lead from the output of the transformer to binding posts.

The lower panel is hinged at the bottom and swings out and down; a steel cable stop keeps it from removing its own hinges. Three different colors of formica are glued to the surface of this panel, each demarcating a different power supply.

We've mounted a lamp fixture above our exhibit to illuminate the exhibit graphics; you might not need one if your museum is better lit than ours.

Related Exploratorium Exhibits

Electric Currents

Induction; Shaded Pole Motor I & II; Eddy Currents; Electric Pendulum; Speedometer.

Oscillation

String Analogy; Vibrating String; Harmonic Series Wheel; Side Bands; Phase Pendulum; Theremin; Kettledrum; Relative Motion Pendulum; Visible Effects of the Invisible; Aeolian Harp; Bells; Bronx Cheer Bulb; Air Track; Hot Effects; Suspense; Chaotic Pendulum; AM Lightning; Air Reed; Coupled Resonant Pendulums; Drawing Board; Sound Column; AM Radio.

Exploratorium Exhibit Graphics

ZERO TO SIXTY

This exhibit lets you experiment with Direct Current (DC) and Alternating Current (AC). The light bulb, current meter, oscilloscope, and speaker react to electric current in different ways. They are all connected to the same yellow plug, which you can plug into three different sources of electricity on the panel below.

To do and notice:

Find the yellow plug and plug it into the red-and-black posts marked DIRECT CURRENT. Pull the plug out and push it partway in again a few times. Notice the effect on the light bulb, oscilloscope, speaker and current meter.

Take the plug out, turn it around so that the prongs are reversed, and plug it in again. Notice that the light bulb still glows. The speaker moves the other way. The oscilloscope and the meter also change. Try pulling the plug out and pushing it back in.

Move the yellow plug over to the black-and-white posts marked ALTERNATING CURRENT. Can you hear a low note from the speaker?

Put the yellow plug into the center black-and-green posts marked AC & DC. The knob controls how often the current changes direction. Slowly turn the knob from zero to sixty and watch how the light bulb and other devices react. Turning the dial to zero stops the current from changing direction. Zero doesn't mean zero power; it means zero change. The strength and direction of the current remain at what value they were when you turned the dial to zero.

Current Meter

This meter indicates the strength and the direction of the current. It can't respond to rapid changes.

Oscilloscope

An oscilloscope indicates rapidly changing currents. A blue dot sweeps automatically from left to right in 1/5 second, tracing a line of light. The dot moves up and down in response to changes in current.

Speaker

A current through the speaker in one direction causes the speaker's cone to move out. A current in the other direction makes the cone move in.

Light Bulb

An electric current in either direction through the bulb's filament makes the filament heat up and glow.

What is going on:

A current can flow in either direction.

An electric current is the flow of electric charges through a conductor, such as a wire. A circuit is a continuous pathway through which a current can flow. In this exhibit, by putting the plug in a socket, you complete a circuit and current flows through the meter, the light bulb, the oscilloscope, and the speaker.

Direct current (DC) flows in only one direction through the circuit. When you reverse the plug in the DC source, you change the direction in which the current is flowing. The meter, oscilloscope, and speaker react to the change. The light bulb glows no matter which way the current flows.

Alternating current (AC) flows back and forth through the circuit, changing direction at regular intervals. The frequency of an alternating current is the number of times that the current flows back and forth through the circuit each second - that is, the number of cycles per second.

So what:

The electricity that the power company supplies to your home is AC with a frequency of 60 cycles per second. The selection of 60 cycles per second for the frequency was somewhat arbitrary. If the frequency is too low, light bulbs will flicker noticeably. (If you put the plug in the center black-and-green posts and turn the knob, you can figure out how low the frequency can be before you notice that the bulb is flickering.) If the frequency is too high, the power company will lose more power during transmission. Within these limits, the frequency can vary. In Europe, the most common frequency is not 60 cycles per second, but 50 cycles per second.

RELATED EXHIBITS

Transformer
Electrical Analogy

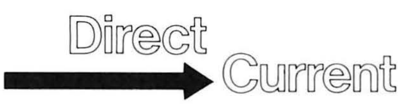

DC stands for Direct Current, which means that the electric current flows in only one direction through the circuit. Batteries are the most common source of DC.

The frequency of an alternating current is the number of times that the current flows back and forth through the circuit each second. The knob below controls the frequency of the current. At zero, the current does not change direction and therefore is DC. The source of this current is a special electronic circuit inside the exhibit which we developed to let you control the frequency

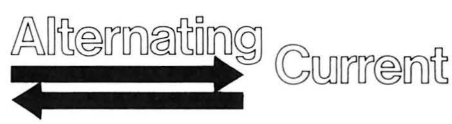

AC stands for Alternating Current, which means that the current changes its direction of flow at a regular rate. When the plug is in this socket, the current flows back and forth sixty times every second. The electric sockets in your home provide AC at 60 cycles per second. The transformer changes the voltage from 120v to 3v.

Eye Logic

Exhibits in the Eye Logic section cover a variety of the basic visual cues that we use to make sense of the world. For example, in *Gray Step 4* the importance of edges and boundaries can be clearly experienced as you see gray stripes change from light gray to dark gray, depending on their position over a background of black and white stripes. As you stare at one of the moving patterns in *Three Spinners* you can experience some of the ways you detect motion and even the afterimages of motion. In the *Whirling Watcher* you can see an illusion of coherent movement created out of a succession of still images, each of which persists at the back of your eye for a fraction of a second.

Eye Logic Exhibits in Cookbooks I, II, and III:

Gray Step 4

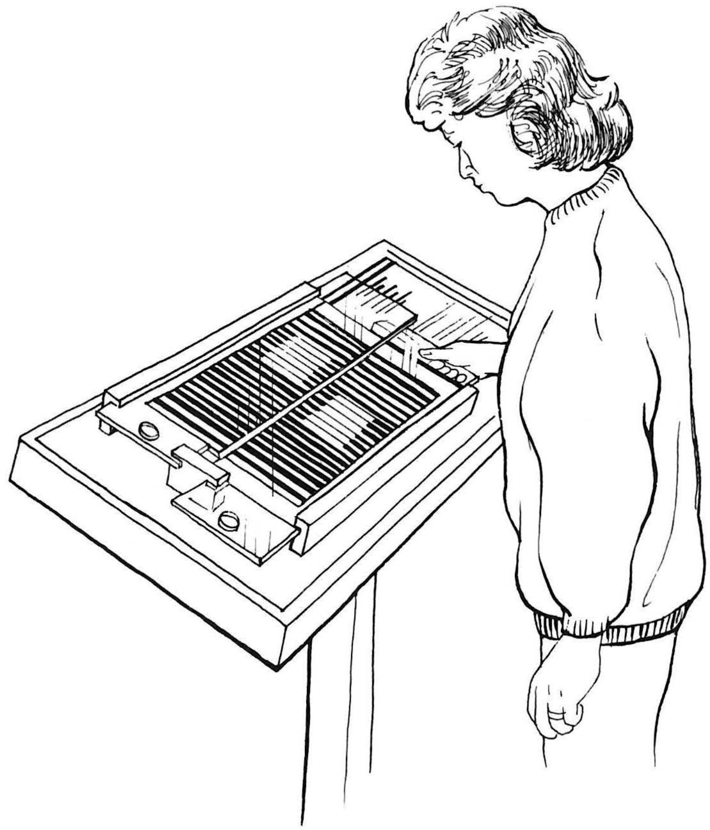

Description

This exhibit vividly demonstrates an interesting problem in the area of perception. Normally the brightness of an object is perceived relative to the brightness of the objects around it. A gray object should appear lighter surrounded by darker objects and darker among lighter objects. *Gray Step 4* shows the exact opposite. When the gray stripes are between the black stripes they appear darker, while they appear lighter between the white stripes.

Construction

The exhibit is fairly simple to build. It consists of two independent plexiglas sliders—each with gray stripes painted on its undersides—mounted over an array of black and white stripes.

Our sliders are about 25'' long and 7'' wide and are made from 1/4'' plexiglas. They slide in grooved hardwood supports that also act as stops. The plexi panels are allowed a sliding distance of 2 1/4'' (6 stripes worth). All stripes in our version of this exhibit are 3/8'' wide; the gray stripes are painted on the bottom of the plexi panels. The supports are slotted so that the panels slide 1/8'' above the black and white stripes, to prevent scratching; but remember that it's important for the gray stripes to be close to the black and white stripes to avoid parallax problems. We have glued plexiglas buttons to the ends of the sliders to give the visitor something to push and pull on. The gray stripes are situated on the plexi such that when the visitor pushes both panels to one end of their travel, the stripes on the top panel align over black stripes and the stripes on the bottom panel align over white stripes. This way both effects are seen.

We use a single black and white striped background 11 1/2'' high and 16 7/8'' (45 stripes) wide.

The exhibit can be wall or table mounted—ours is mounted on the railing of our mezzanine.

Critique and Speculation

Our only problem with this exhibit is that we don't know why it works! If you find out, please give us a call or direct us to the appropriate literature.

We have built this effect into a T-shirt that we sell in our store. We simply printed a pattern of black and white stripes over a gray T-shirt. Depending on where the gray shows through, it looks lighter or darker.

Related Exploratorium Exhibits

Cues, Dominant

Far-Out Corners; Floating Rings; Horse and Cowboy; Impossible Triangle; Reverse Masks; Trapezoidal Window; Cheshire Cat; Reach for It; Cardboard Tube Syllabus; Gray Step I, II, III.

Visual Edge Effects

Gray Step I, II, III; Everyone is You and Me; Grease Spot Photometer; Traffic Illusion; Fading Dot; Rainbow Edges in Your Eye; Cardboard Tube Syllabus; Benham's Disc.

Lateral Inhibition

Columns; Color Contrast; Sophisticated Shadows; Starburst; Colorizer.

Exploratorium Exhibit Graphics

GRAY STEP 4

SLIDING GRAY STEP

You can make these gray stripes look lighter or darker just by changing their positions on the striped background.

To do and notice

- Slide both plastic panels all the way over to the left. Notice that the gray stripes on the top appear lighter than the gray stripes on the bottom.
- Slide the top panel to the right until the gray stripes are on top of the white lines. Notice that the gray stripes on the top now match the ones on the bottom.

What is going on

The gray stripes on the top panel are the same shade as those on the bottom panel. When you change the position of the stripes, they seem to get lighter and darker. This illusion is not fully understood, but it seems to have something to do with the way your eye determines relative shading.

Your eye focuses an image of the striped pattern on your retina, a layer of light-sensitive cells at the back of your eye. Nerve cells in the retina begin processing the light and dark information in two different ways.

Some nerve cells in the retina take a look at the big picture, receiving information from a large area of the retina. These cells blend light from several stripes and react as if the light were mixed together. When the gray stripes are surrounded by white stripes, you see pale gray, a mixture of white and gray. When the gray stripes are surrounded by black stripes, you see dark gray, a mixture of black and gray.

Even though some nerve cells blend the light from the stripes together, other nerve cells receive information from a small area of the retina. These cells note the contrast between the gray stripes, the white stripes, and the black stripes, allowing you to see the striped pattern.

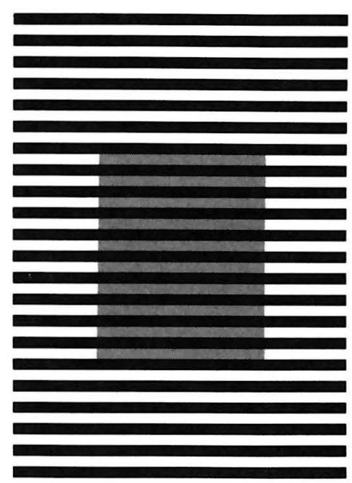

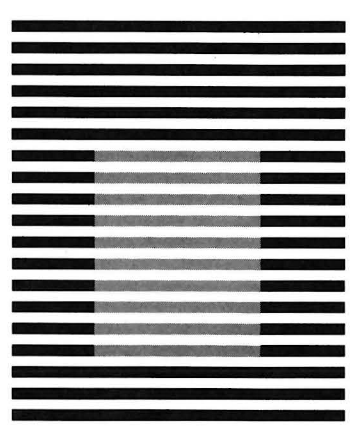

Whirling Watcher

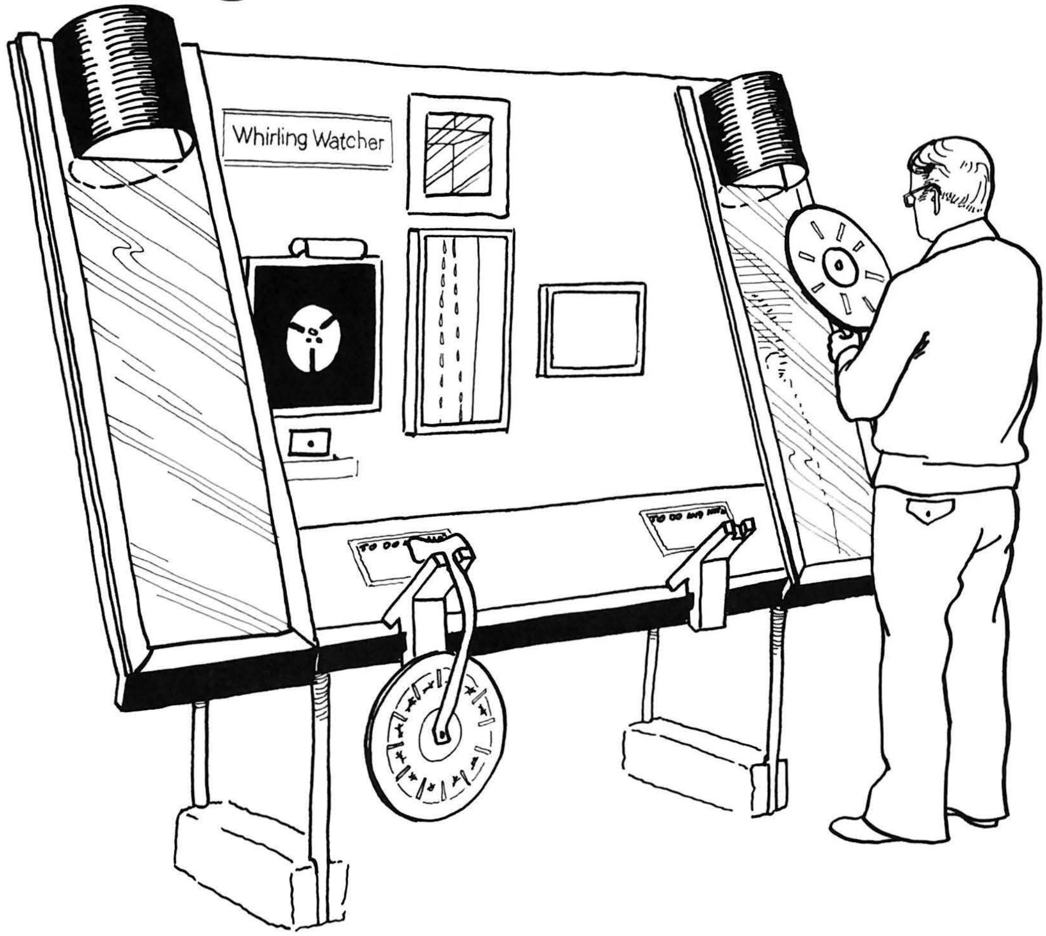

Description

The visitor looks through slots radiating from the center of a spinning disk, which acts as a simple stroboscope. On the back of the disk is a cartoon of a running horse which, when viewed in a mirror through the slots in the whirling disk, seems actually to be galloping along. Also on view are a motorized spinning disk (with a geometric pattern drawn on it) and a stream of water drops. By spinning the hand-held disk at the proper rate, the viewer can stop the motion of either.

Construction

The spinners are the most complex part of this exhibit and will be described first. They are 14" in diameter and are made of 1/4" thick PVC plastic sheet. The disk must spin with as little friction as possible; we use an aluminum hub (1/4" aluminum circles that sandwich the PVC wheel) that houses ball bearings. The hub also has an off-center finger hole that the visitor can use to spin the disk (the finger hole is provided with a ball bearing to minimize wear on the visitor's finger). The entire hub is 4-3/4" in diameter and 3/4" thick (two layers of aluminum and one of PVC); the pieces are through-bolted together.

The disk has 12 slots cut in it (1-3/4" long and 3/32" wide, starting 1-1/2" from the wheel edge). The edge of the wheel is then sandwiched between two rings of PVC sheet 1-1/2" wide. These rings serve several purposes: they protect the edge of the wheel from damage; they give the visitor something to grab; and they add rotational inertia to the wheel so it spins longer. (They also hide the outside ends of the slots if they're cut sloppily.)

The entire wheel assembly is bolted to one end of a bent steel tube which is flattened at both ends (see diagram). On the other end is bolted

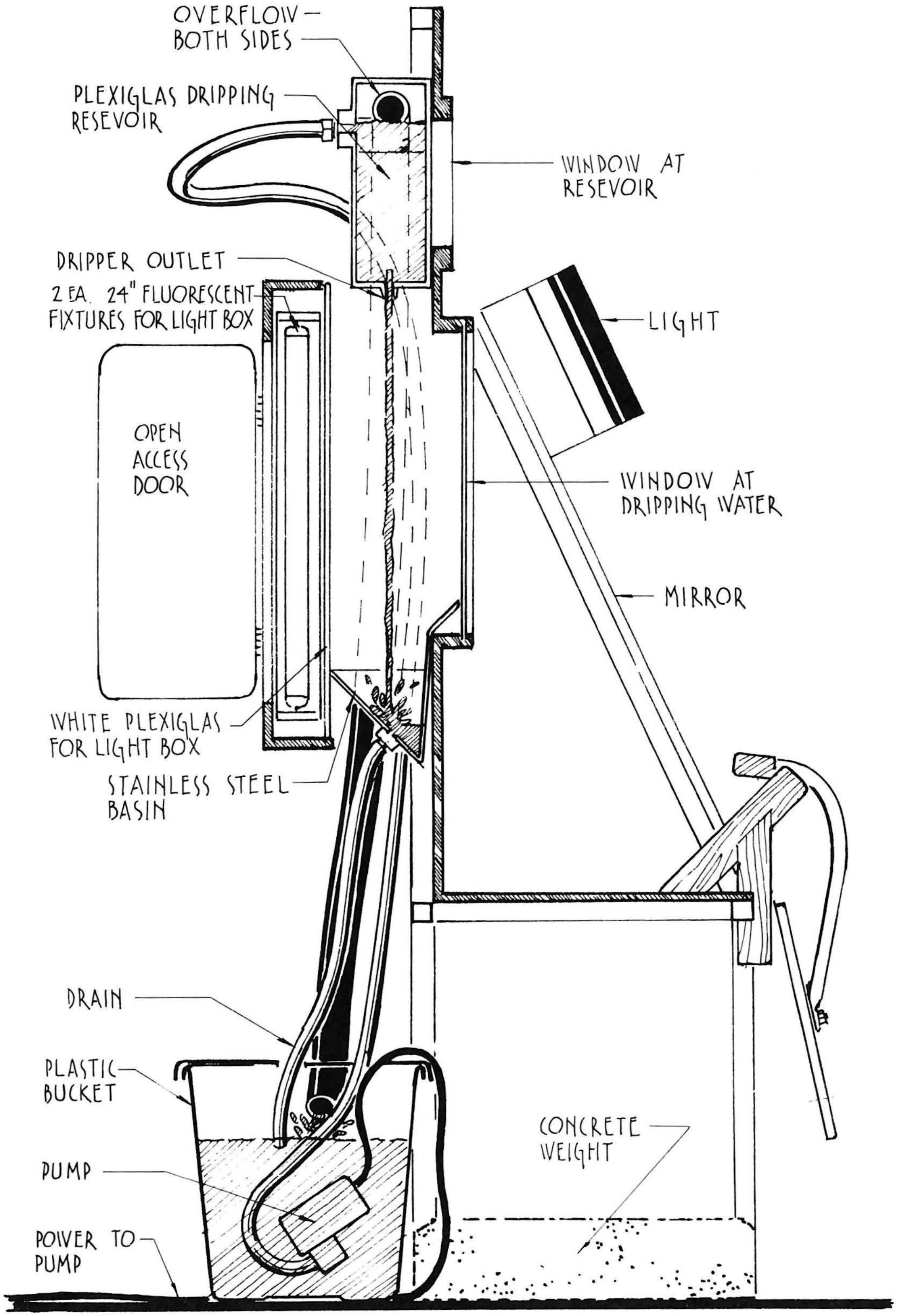
OVERFLOW—
BOTH SIDES
PLEXIGLAS DRIPPING
RESEVOIR
WINDOW AT
RESEVOIR
DRIPPER OUTLET
2 EA. 24" FLUORESCENT
FIXTURES FOR LIGHT BOX
LIGHT
OPEN
ACCESS
DOOR
WINDOW AT
DRIPPING WATER
MIRROR
WHITE PLEXIGLAS
FOR LIGHT BOX
STAINLESS STEEL
BASIN
DRAIN
PLASTIC
BUCKET
CONCRETE
WEIGHT
PUMP
POWER TO
PUMP

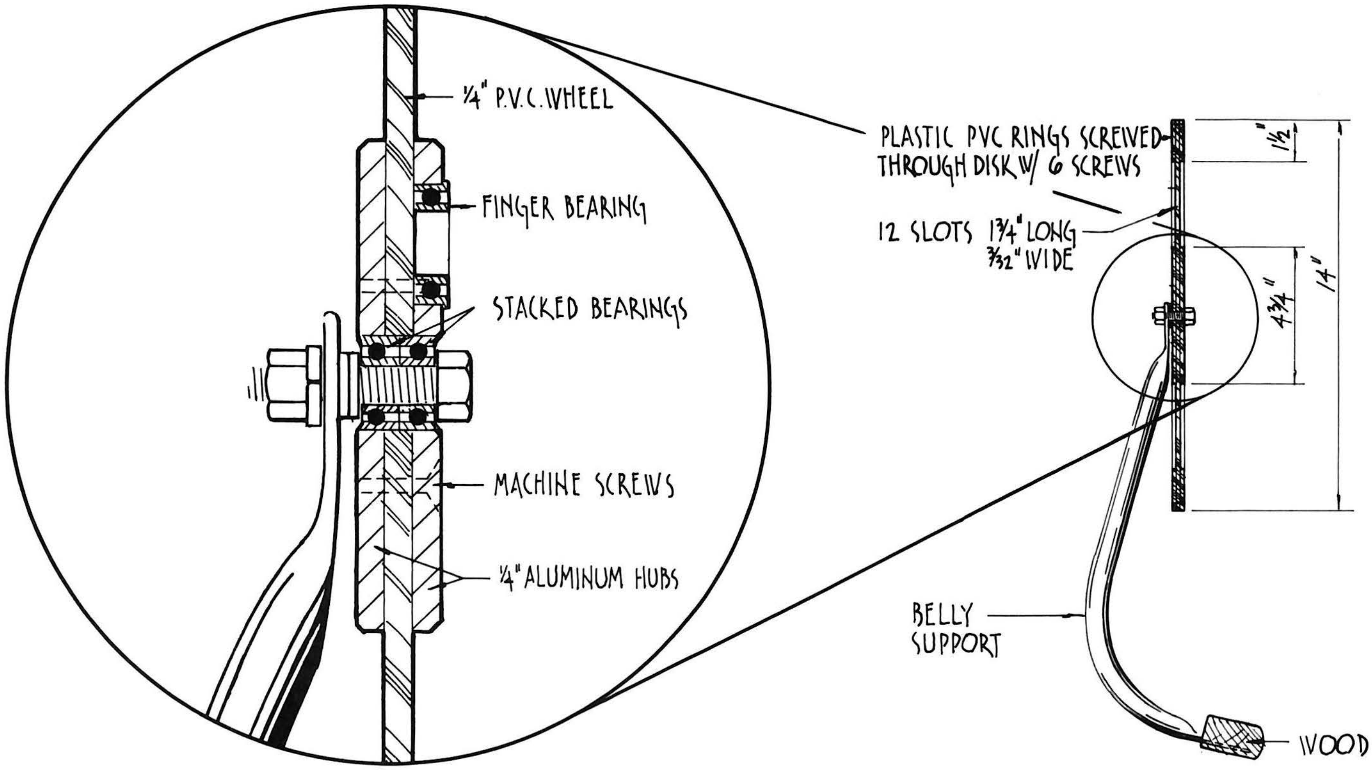

Spinner Detail

a hardwood block "belly rest;" the spinner can be hung from this block when not in use.

The frame of the exhibit is welded together from 1" square steel tubing. The two mirrors (ours are about 40" tall and 14" wide) are mounted on each side of the frame and are tilted up at an angle of 30 degrees for easy viewing. Both mirrors are illuminated from above with a shielded 30 watt spot lamp.

The motorized spinning disk has a pattern of stripes, dots, and circles on it that can be seen when the visitor spins the strobe disk at the correct speed. It is important to put a non-repeating pattern on the face of this disk so that it will be stoppable at only one spin rate of the strobe. It is spun with an 1800 RPM motor, which the visitor can stop with a button just beneath it. To make it stop fairly quickly, the button operates a relay that sends a DC current through the AC motor (this is called dynamic braking). Because the disk spins at such a high rate, the public cannot be allowed to touch it; a piece of framed glass guards ours.

The water dripper is pretty simple. It consists of two reservoirs: a plastic bucket on the ground behind the exhibit that houses the pump and most of the water; and the dripping reservoir, a plexiglas box with cylindrical plexi hose connections solvent-cemented to it. The water enters through a hole in the back of this 2-liter box. We've installed an overflow hose in the side of the dripping reservoir, which keeps the water at a constant level and therefore a constant pressure; it drains into the floor bucket. The dripper outlet is a 4" long piece of glass tubing silicone sealed into the bottom of the box. The tube is placed so that it extends about 2" below

Schematic For Dynamic Braking

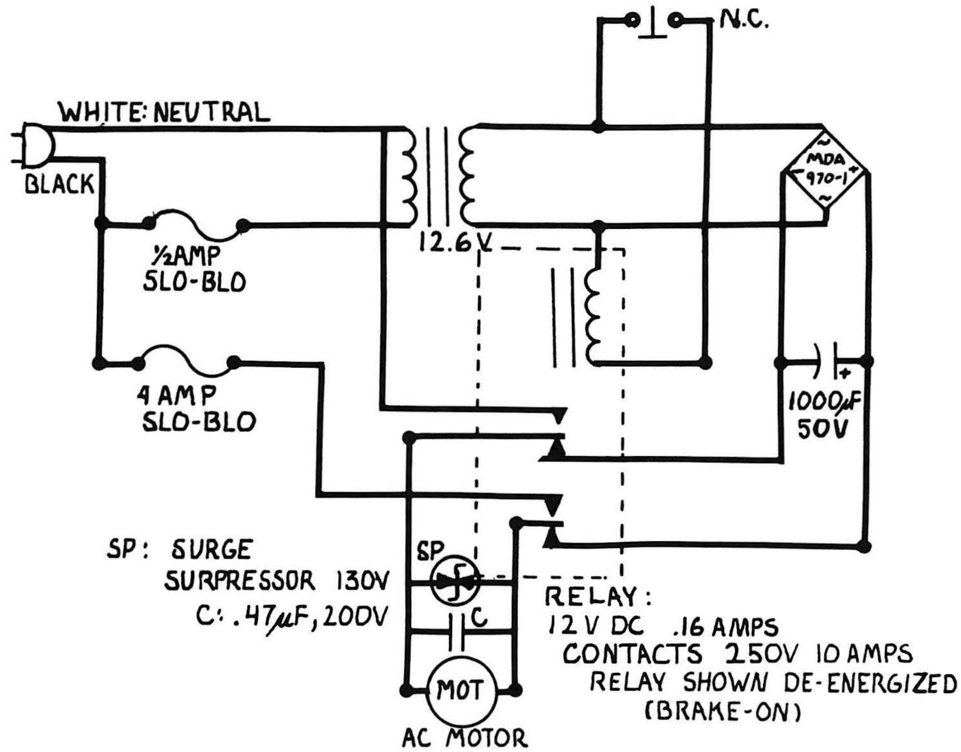

the box and 2'' above the inside bottom, minimizing the likelihood of its clogging. The pump can be rather small, since it only has to keep up with the dripper, plus a little extra to maintain a small amount of overflow. Anti-fungicidal agents should be added to the water (zepherin chloride and copper sulfate work well).

The drips should be viewed against a black background but should be well illuminated. We've accomplished this by placing rear-lit (with small fluorescent lamps) white plexiglas panels on either side of the black back panel.

We have also placed a simple rear lit (by a tungsten bulb) panel on the exhibit so the visitors can observe moving fingers (and other objects) with the strobe.

Critique and Speculation

The spinner in our version of the exhibit is quite heavy, PVC being a rather high-density plastic. Small children have trouble holding the spinner for any length of time, and even adults get tired after a while. A lighter material would be easier; or maybe a smaller spinner for smaller people would do the trick.

If you don't have welding facilities, the frame of the exhibit can be built with wood.

The lighting on the dripping water would be improved if the white panels, which are quite bright, faced sideways instead of directly at the visitor.

Related Exploratorium Exhibits

Stroboscopy/Persistence of Vision

Frozen Hand; Thank You Box; Aether Zoetrope; Kettle Drum; Vibrating String; Piano Strings; Stobe Fountain; Bronx Cheer Bulb; Florescent Rods; Air Reed; Grey Step II; Light Forms; Magic Wand; Persistence of Vision; Line by Line; Seen Clearly in Hazy Conditions; Stereo Rule; Triple Aye Light Stick; Lumen Illusion; Shimmer; Carbon Filament; Recollections.

Scanning

Model of Color TV; Electron Microscope; Speech Dissector; Discernability; Hot Light.

Accelerated Motion

Avalanche; Balancing Stick; Bouncing Ball; Chaotic Pendulum; Daisy Wheel Dyno; Downhill Race; Falling Feather; Gravity Well; Lunar Lander; Phase Pendulum; Reaction Time; Vortex; Tornado.

Detection and Measuring Devices

AM Radio; Cool Hot Rod; Dial Indicator; Does Your Back Curve; Drum; Earpiece; Giant Meter; Grease Spot Photometer; Heartbeat; Hot Effects; Nerve Impulse; Seismograph; Speedometer; Standards Display; Sun Dial; Sweat Detector; Tools Display; Touch Sensitivity; Voice Trombone; Voltage Drop; Weather Station; Cloud Chamber; Give & Take; Michelson Interferometer; Moire Patterns; Reaction Time; Spark Chamber; Suspense; Another Way of Seeing; Glow Wheel.

Whirling Watcher

Graphics beside disc on left

To do and notice

Hold the disc by the pipe handle with the horse drawings facing the mirror.

Rest the wooden block against your stomach.

Use the finger hole to spin the disc.

Look through the slits into the mirror. Watch the reflections of the horses.

Graphics beneath motorized spinning disc

To do and notice

Stand back about four feet.

Take the disc from the holder below. Spin the disc rapidly and look through the slits at the blurred image above. Slow the disc down gradually until the blurred image seems to stop.

Hold down the button to stop the blurred image.

Graphics beside stream of water drops

To do and notice

Take the disc from the holder to your right. Spin the disc rapidly and look through the slits at the water stream.

Graphics beside second disc

To do and notice

Look through the slits in the spinning disc and shake a finger or your hand in front of the light box.

To see another effect, spin the disc slowly and stare through the disc at the light box. Many people see colored patterns.

Graphics on mirrors

To do and notice

Stand close to the mirror.

Look through the slits in the spinning disc at the reflections of the horses.

Monocular Vision/Size and Distance

The perception of the size and distance of things is not "ready-made." There are a lot of different cues that we use to determine where things are: the difference of images in each eye, one image's overlapping of another, brightness and amount of detail, shadows—all are important cues. Exhibits in this section focus on depth cues that inform your eye-brain about changing sizes and distances. As things get further away they make smaller images on the backs of your eyes. When you use both eyes to observe a receding object, a number of other cues besides changing image size come into play to help you determine the object's position. By closing an eye you can eliminate these "stereovision" cues and experience much more easily the relationship between changes in image size and distance. Most of the exhibits in this section have viewing restrictors that let just one eye view size and distance shifts. In *Changing Squares*, for example, two squares of light seem to move forward and backward in space; but in fact the only change is in their size. In *Size and Distance*, you can see how hard it is to determine distance if you only have size as a visual cue.

Size and Distance Exhibits in Cookbooks I, II and III:

Changing Squares

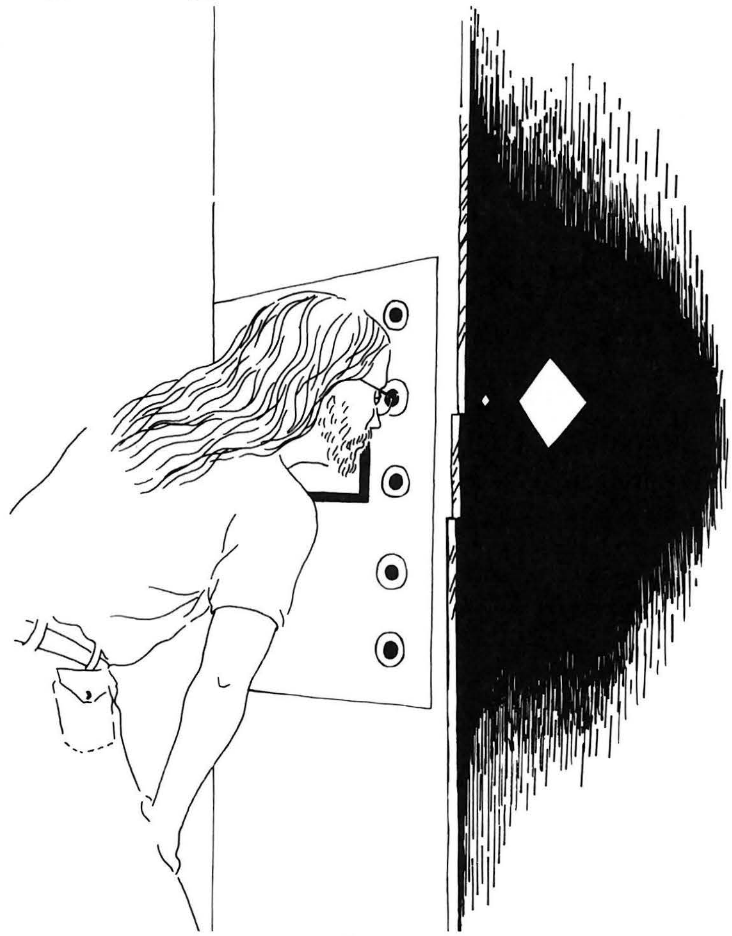

Description

The visitor looks through a hole in a wall into a darkened room. Inside are two squares that seem to grow and shrink in size. Since the observer is constrained to the use of one eye (monocular vision), it's hard to figure out if the squares are changing in size while remaining at a constant distance or changing distance while staying the same size, or both. By making a conscious decision, the visitor can see it either way.

A button on the wall turns on a light in the room revealing the true nature of the device.

Construction

This device works with two thin black panels which are linked together so that they slide from side to side in opposite directions at equal rates. The overlapping panels have complementary right angles cut out of them, such that two square holes are formed that grow and shrink reciprocally (see drawing). Since the panels slide in front of a uniform white rear-lit surface, the effect of the changing squares is pretty dramatic.

The mechanism of this exhibit is housed in a wooden box 43'' wide, 26'' high, and 18'' deep, with a proscenium—18'' high and 26'' wide—cut in the front for viewing the squares. The front of the box is painted flat black. The squares shrink to 1-1/4'' and grow to 8'' on a side. To accomplish this, each of the panels slides about 5'' back and forth. (This motion is adjustable, as described later.)

The box sits inside a darkened room, 40'' off the ground and 6' from the wall through which it is viewed. Visitors stand outside this wall and can look in through one of five eye-holes—each 7/8'' in diameter—that are placed at varying viewing heights on the wall. Note that these are single holes meant to be looked through with one eye only—we want to eliminate stereo vision with this exhibit.

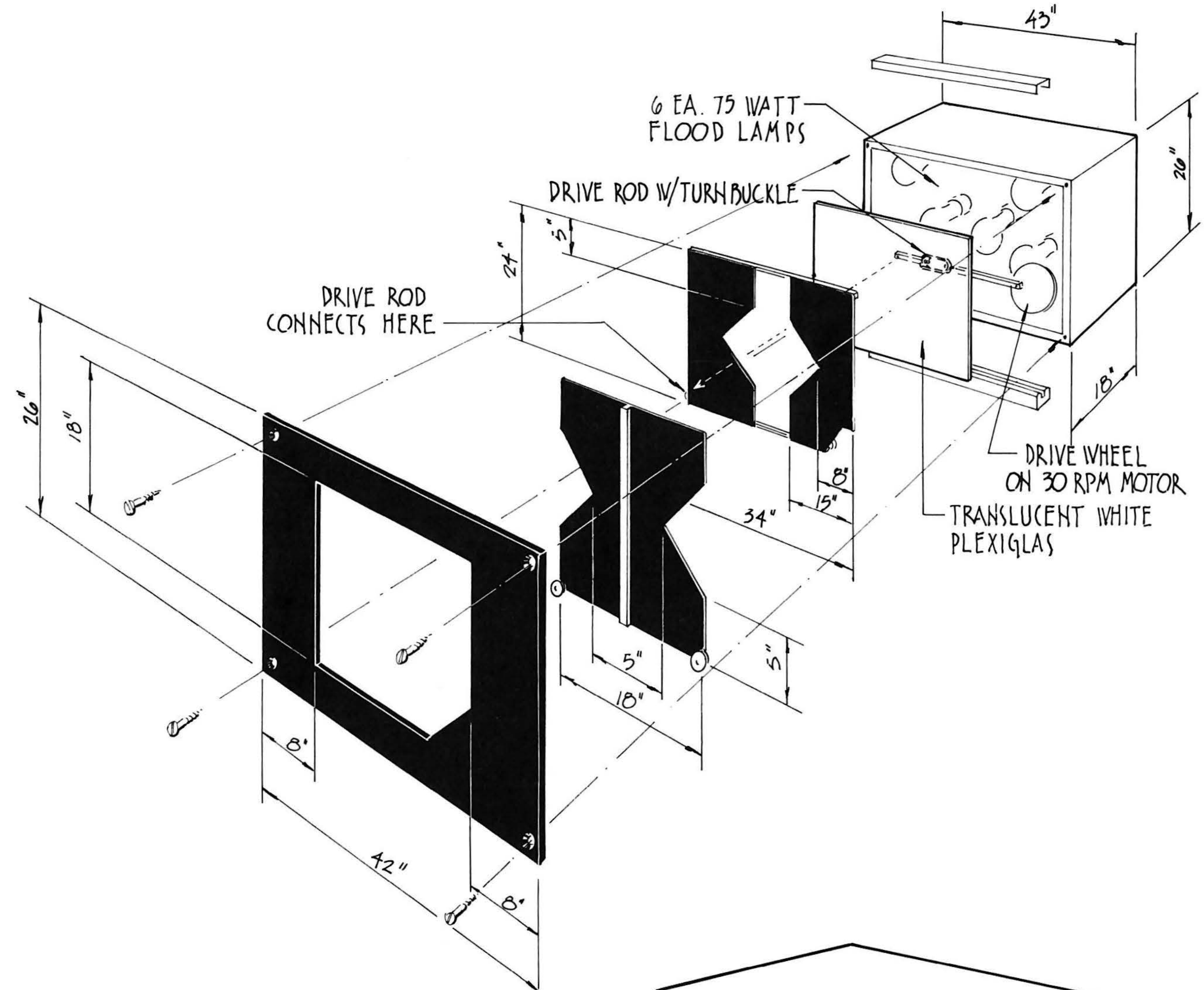
43"
6 EA. 75 WATT FLOOD LAMPS
26"
DRIVE ROD W/TURNBUCKLE
5"
24"
DRIVE ROD CONNECTS HERE
26"
18"
18"
DRIVE WHEEL ON 30 RPM MOTOR
8"
15"
34"
TRANSLUCENT WHITE PLEXIGLAS
5"
5"
18"
8"
42"
8"

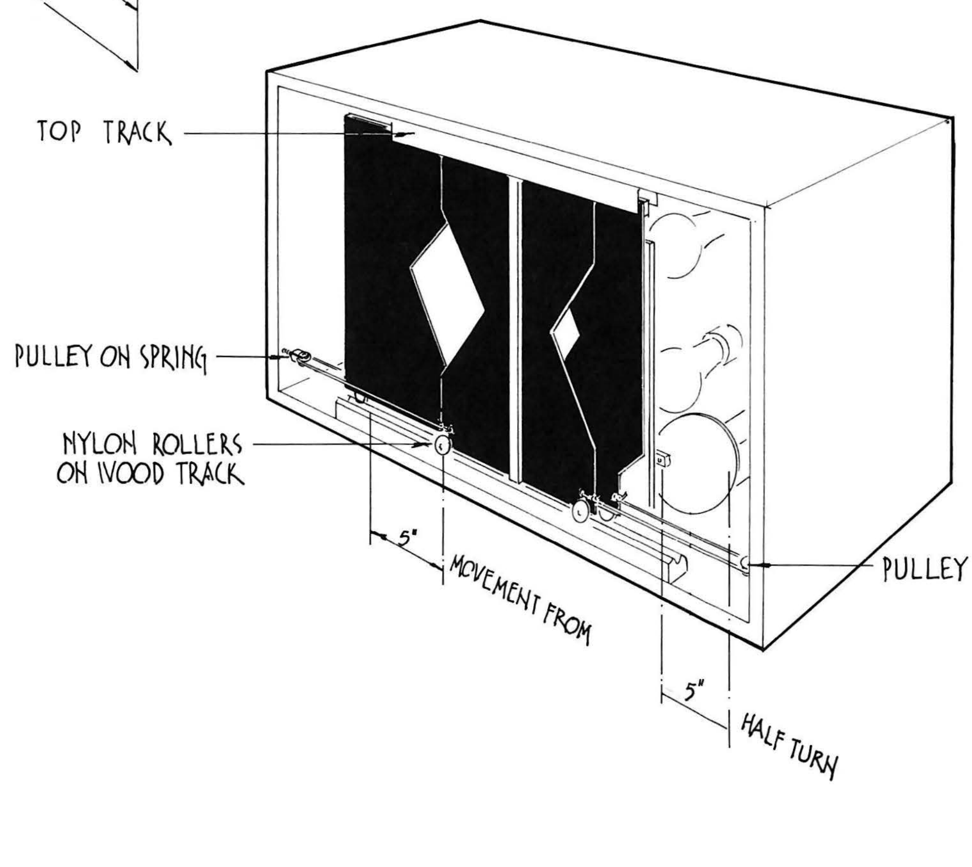
TOP TRACK
PULLEY ON SPRING
NYLON ROLLERS ON WOOD TRACK
5"
MOVEMENT FROM
PULLEY
5"
HALF TURN

For the illusion to work properly there should not be any visual clues that give away how the squares actually change in size. The panels are made of flat black formica with a thin wooden frame for extra rigidity. We used the formica because we wanted the panels' edges to be invisible, especially where they overlap at the squares' upper and lower corners. The front panel has an hourglass shape with right angles at the "waist." The rear panel, which forms the other half of each square, has two separate pieces of formica held in a thin wooden frame (see diagram). Both panels ride on nylon rollers fastened to their bottom edges; the rollers are attached to the front side of the front panel and to the back of the rear panel, so that the panels can slide face to face as close as possible (ours brush each other as they move).

The panels are linked together with a cord which passes over a pulley at either side of the box, so that if one panel moves to the right, it pulls the other panel an equal distance to the left (the pulley changes the direction). One of the pulleys is attached to the box with a spring—this takes up slack in the system and prevents backlash. A note about the cord: we use the same cord your dentist uses to power his/her drill. This cord, available from dental supply houses, is very strong, very flexible, doesn't stretch, and is extremely durable. We've never had to replace ours. All other types of cable we've tried have failed due to the bending around the pulley. A larger diameter pulley may help if you can't get the dentist cord.

A 30 RPM motor turns a large circular drive wheel which serves as a crank. Attached to this drive wheel is a wooden connecting rod which extends across the box to a pivoting joint on the moving rear panel. As the wheel turns, the rod pushes the rear panel back and forth, and the front panel reciprocates by virtue of the pulleys. Several holes placed at different radii in the drive wheel allow for some adjustment of the amplitude of motion (this adjustment is only done during set-up of the exhibit, and is left fixed once the correct position is found). We've also put a turnbuckle in the middle of the connecting rod to provide for centering adjustment; this centering makes the squares the same size when small or large.

It is important for the background to be uniformly lit. We put a piece of translucent white plexiglas just behind the sliding panels. On the rear of the box we've placed six 75 watt flood lamps, arranged in a squat hexagon and pointing towards the plexiglas. The lamps have household dimmers on them for fine tuning. Be sure to provide some ventilation or substantial heat can build up; the ventilation shouldn't let much light escape, as this might diminish the effect.

We have installed a button on the wall near the viewing holes, which illuminates the sliding panel mechanism with a 75 watt flood lamp. After observing the illusion of the exhibit, the visitor presses the button to see what's really going on in there.

Critique and Speculation

Except for normal light bulb changing, this exhibit is essentially maintenance free. We've put ours in a small dark storage room, a situation that can create conflicts of interest when the stock piles up and blocks the viewing holes in the wall.

Related Exploratorium Exhibits

Size – Distance

Distorted Room; Inverse Square Law; Trapezoidal Window; Wide Eyes; Size & Distance; Cows; Perspective Window Camera; Points of View; Three-D Shadows; After Image; Electric Fish; Eyeballs; Stereo Rule; Moire Patterns; Reverse Distance.

Visual Edge

Gray Step I, II, III; Everyone is You and Me; Grease Spot Photometer; Traffic Illusion; Fading Dot; Rainbow Edges in Your Eye; Cardboard Tube Syllabus; Benham's Disc.

Cues, Dominant

Far-Out Corners; Floating Rings; Horse and Cowboy; Impossible Triangle; Reverse Masks; Trapezoidal Window; Cheshire Cat; Reach for It; Cardboard Tube Syllabus; Gray Step I, II, III, IV.

Depth Perception

Vasarely's Movement Study; Cross Eyes/Wall Eyes; Depth Spinner; DEWA Hologram; Inferno.

Changing Squares

Look through any one of the holes.

Push button to see what is going on.

Size & Distance

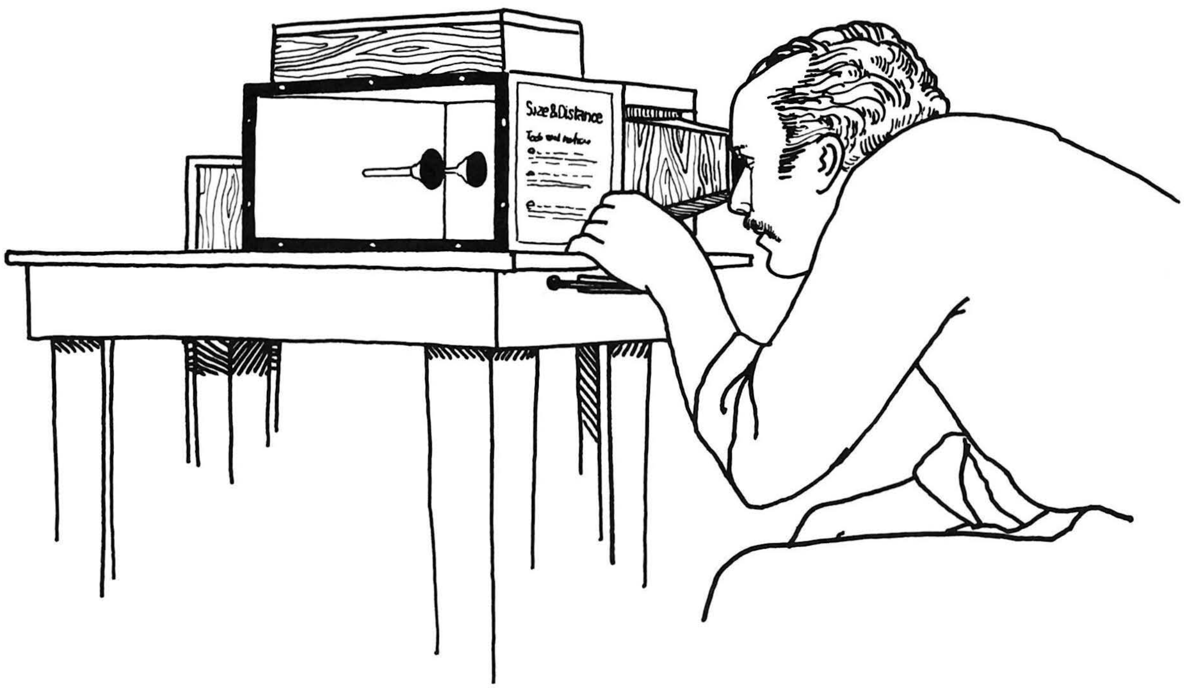

Description

This exhibit demonstrates that the perceived size and distance of an object are intimately related. The visitor looks at two disks through a small hole, which confines the visual information to one eye at a single point in space. Turning a knob which moves one of the disks closer or farther from the peephole, the visitor tries to guess when the two disks are exactly the same distance from their eye; guesses can be verified by looking through a side window. Since the movable disk is smaller than the other, it is always placed closer to the peephole.

Construction

We've built this exhibit in a wooden box about 14'' long. The peephole is on the end of a four-sided truncated pyramid (about 5-1/4'' long) fixed to the front of the box. A small rectangular window, cut from black cardboard and fixed inside the box in front of the viewing pyramid, limits the field of view to the two disks and the back wall—no other parts of the box are visible. The inside of the box is painted flat white for good light diffusion. Illumination must be uniform to minimize any clues—shadows, etc.—about the actual location of the disks.

Lighting is provided by two small fluorescent fixtures. One of these is placed under the viewing window in front of the disks, while the other sits along the lower right side of the box; neither fixture can be seen through the peephole. We use F6T5-CW bulbs, which are wonderfully small and versatile.

The disks are machined from aluminum. One is 2'' in diameter, the other 1-3/4''. The faces are machined as flat as possible and are painted flat black—be careful not to leave machining marks, which could give a clue about disk size. Steel rods are set-screwed into flanges on the backs of the disks.

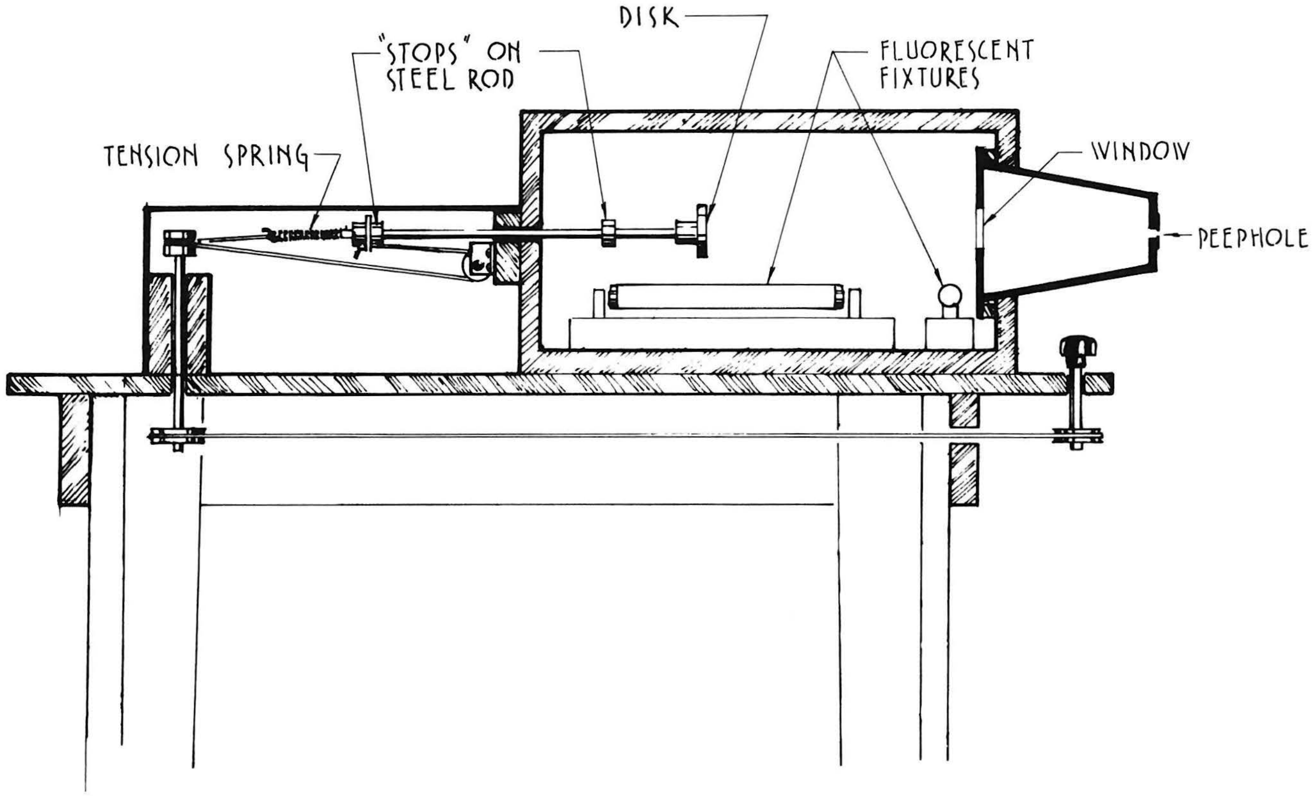

The large disk is fixed in place about 3-3/4'' from the rear of the box. The small disk can move forward and back with about 4-1/2'' of travel starting about 3'' from the rear of the box. The rod from this disk protrudes through the back of the box and is hooked to a pulley system that the visitor moves by turning a knob near the peephole (see diagram).

Exploratorium Exhibit Graphics

Size & Distance

To do and notice:

☐ Look through the eye hole and turn the knob to move the circle on the right forward or backward.

☐ Line up the two circles so that they look equally far away from you. To check what you have done, look into the left side of the box.

What is going on:

Large distant objects can look the same size as small close objects. By closing one eye, you limit your visual information. With more information and points of view, you can make more accurate judgements about an object's size, shape and distance from you.

Related Exploratorium Exhibits

Size and Distance
Distorted Room; Inverse Square Law; Trapezoidal Window; Wide Eyes; Changing Squares; Cows; Perspective Window Camera; Points of View; 3-D Shadows; Afterimage; Eyeballs; Stereo Rule; Reversed Distance; Moire Patterns.

Dominant Cues
Far Out Corners; Floating Rings; Horse and Cowboy; Impossible Triangle; Reverse Masks; Cheshire Cat; Cardboard Tube Syllabus.

Stereoscopic Vision

Because our eyes are approximately 2-1/2 inches apart, each has a slightly different view of things than the other. This difference provides a very strong cue for perceiving depth. The exhibits in this section show a variety of examples of how two images of the world are combined into one that is three-dimensional. In addition, there are several exhibits that let you see what happens when each eye's view is entirely different. Strange things can be seen when there is conflicting information. At the *Cheshire Cat* exhibit, for example, you can see your friend's face disappear right before your eyes, leaving only a smile.

Stereoscopic Vision Exhibits in Cookbooks I, II, and III:

Cheshire Cat

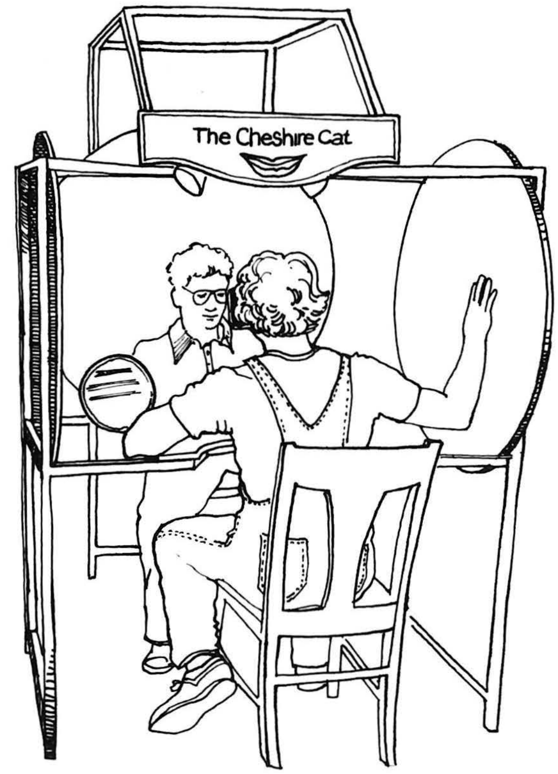

Description

Usually both of your eyes receive almost the same views which are fused together in the brain to form a single three-dimensional view of the world around you. This exhibit allows you to explore the phenomenon of eye rivalry. One person acts as the subject and another as the observer. The subject sits against a uniformly lit white background. Using an arrangement of hinged mirrors, the observer views the subject with one eye and a blank white surface with the other eye. The observer then sweeps a hand across the blank field. This will selectively erase all or parts of the person viewed by the other eye. Sometimes only the subject's smile remains, hence the name of the exhibit.

Construction

Cheshire Cat is fairly simple to construct. Ours is built on a welded square steel tubing frame. Two side screens made of plywood with white formica 3' in diameter and one back screen 4' in diameter are hung from the frame. These disks—designed to be large enough to completely fill the viewing mirrors—are illuminated with 75 watt floodlights, one per disk. The lamps are in outdoor fixtures for breakage and burn protection. Although it's not crucial, we have found that the effect is enhanced by lighting the subject somewhat less intensely. Experiment to see what works best for you.

The mirror hinge is the most difficult part of this exhibit. Two 6" diameter mirrors are glued to steel plates. These plates have welded to them, top and bottom, two tubes, 1/2" ID, 5/8" OD. These tubes fit over (and hinge on) a 1/2" steel rod, which is welded to the frame. A steel face plate with eye holes and wood forehead rest is also mounted over this rod and fixed in place with set-screws. Another piece of steel tube covers the rod's middle section to keep fingers from being pinched between the mirror plates and the rod. The mirror plates have tabs sticking out at the bottom that serve both as handles and as stops. The mirrors can be flipped right or left so the viewer can use either the right or left eye to view, respectively, either the right or left hand. This is important because many people have a strongly dominant eye. The mirrors can also be positioned so that they are in both the right and left positions. This permits a single user of the exhibit to fuse binocularly whatever they hold up in the viewing fields.

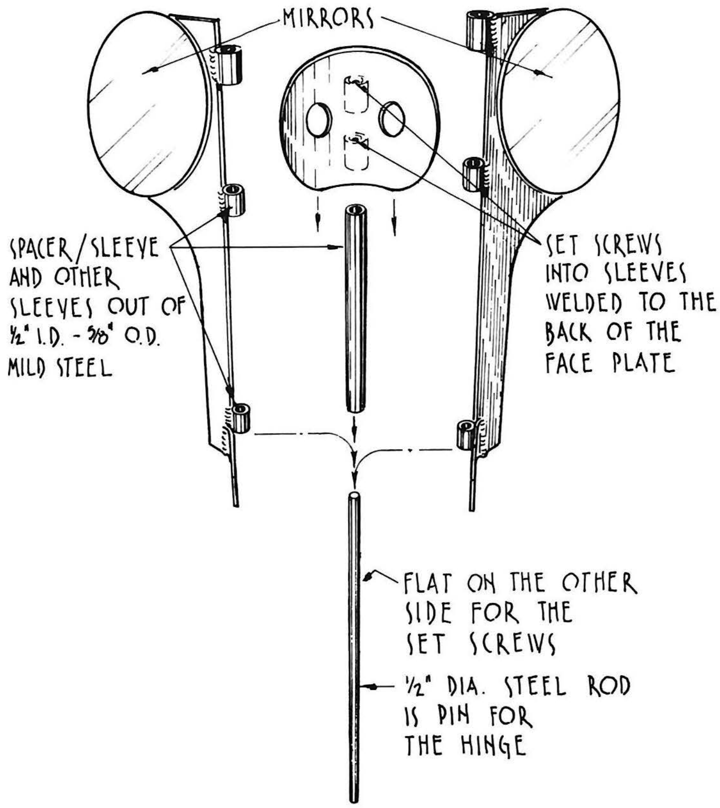

Hinged Mirror Assembly

A semicircular arm rest, covered with formica (cold steel is uncomfortable to lean on), is mounted on the frame below the mirrors. This table also holds the mirror stops—which have magnets to hold the mirrors in position—and is wheelchair accessible.

Critique and Speculation

We have lowered the table a little in more recent versions of this exhibit. We found that it was difficult for little kids and folks in wheelchairs to reach the eye holes. Don't build the table too low or you will obstruct wheelchairs.

This exhibit only scratches the surface of what can be done in the area of eye rivalry and binocular perception. Try variations of your own and report interesting results to us—we'd love to hear from you.

Exploratorium Exhibit Graphics

Cheshire Cat

At this exhibit, you can make a friend disappear, leaving only a smile behind.

To do and notice

Ask a friend to sit in the other chair.

Move the red lever so that it is over the red dot. Rest your forehead against the eyepiece and look straight ahead with both eyes. Your left eye will see your friend and your right eye will see the reflection of the white screen.

While staring straight ahead, sweep your right hand slowly across the big white screen at your right.

If you have trouble making your friend disappear, your left eye may be stronger than your right. Move the green lever so that it is over the green dot. When you look through the eyepiece, your left eye will see the screen and your right eye will see your friend. Sweep your hand across the screen on the left.

What's going on

Usually your two eyes see views of the world that are only slightly different. Your brain combines these views to make a single three-dimensional picture.

The mirror in Cheshire Cat lets your eyes see two very different views. One eye looks straight ahead at your friend while the other eye looks at the big white screen and your moving hand. Your brain tries to put these two views together in a way that makes sense, choosing part or all of the view from one eye or the other.

Movement attracts your brain's attention. When you sweep your hand across the screen, your brain pays more attention to the movement than it does to the stationary face—and parts of the face are erased by the moving hand. No one knows exactly how or why parts of the face sometimes remain, but if you stare at one part of your friend's face, the mouth for example, chances are good that the mouth will not disappear.

Related Exhibits: Cardboard Tube Syllabus (Hole in Hand), Peripheral Vision

Related Exploratorium Exhibits

Binocular Fusion/Stereovision

Cardboard Tube Syllabus; Eye Rivalry 1 & 2; Lightweight Phantoms; Moon Rocks; Professor Pulfrich's Universe; Random Dot Stereograms; Stereo Paintings; Stereo Rule; Two as One; Stereo Viewers Old & New; Three-D Dots; Three-D Shadows; Cross Eyes/Wall Eyes; Snow Patterns.

Time Effects in Perception

After Image; Benham's Disc; Bird in Cage; Color Reversal; Light Pistons; Magnetic Tightrope; Persistence of Vision; Professor Pulfrich's Universe; Random Dot Stereograms; Depth Spinner; Squirming Palm; Stereo Sound 1 & 2; Hearing Meaning.

Motion Detectors

Electric Fish; Motion Detection; Moving Stripes; Watchful Grasshopper; Triple Aye Light Stick; Lumen Illusion; Kinetic Light.

Selective Awareness

After Image; Corpuscles of the Eye; Blood Vessels; Fading Dot; Listening for Letters; Paris in the Spring; Selective Hearing; Hearing Meaning; Vase or Face.

Reach For It

Description

The visitor looks through a viewer at two sets of three rods that are loosely suspended in a table top so that they stick out top and bottom. The viewer is made with prisms, one for each eye, that shift the visual field to one side. Instructed to reach under the table for the middle rod in each set, the person at first finds this very difficult because of the prismatic shift; but presently the eye-brain apparatus adjusts to the new situation and the task becomes easier. Now if the visitor tries to reach for the rods without using the prism viewer, they will discover that they have adapted to the prism-view situation and must re-learn the original coordination (a more rapid process). This dizzying experience demonstrates how adaptable our perceptual systems are.

Construction

As you may have gathered from the above description, this is an easy exhibit to build. We use a simple plywood table with a box underneath to trap and hold the rods (see diagram). The rods are made of 5/16" nylon rod and extend 5" above the table top and below the box bottom. They are held in place vertically with retaining rings, also made of nylon, that are setscrewed to the rods. The rods must have room to move side to side, so that a touch below the table will be visible as a movement above the table. To achieve this the holes in the table top and box bottom are drilled oversize (5/8"). To keep the rods vertical and centered in the holes, foam rubber donuts (with 1/4" holes) are glued as indicated in the diagram. Depending on how challenging you wish to make this exhibit, you can vary the spacing between the rods. Our rods are spaced 1-1/2" apart.

The prism viewer is simply a piece of 1/4" PVC sheet cut with eye holes and a nose recess, with plastic prisms bolted to the rear. We use prisms that were cast with plastic casting resin. The prisms have a 30-60-90 degree triangular cross-section. Casting optical quality prisms is something of an art, and unless you have an adventurous spirit, we recommend you either machine them from plexiglas or simply purchase them.

If you choose to machine your prisms, you can do so with a fly-cutter

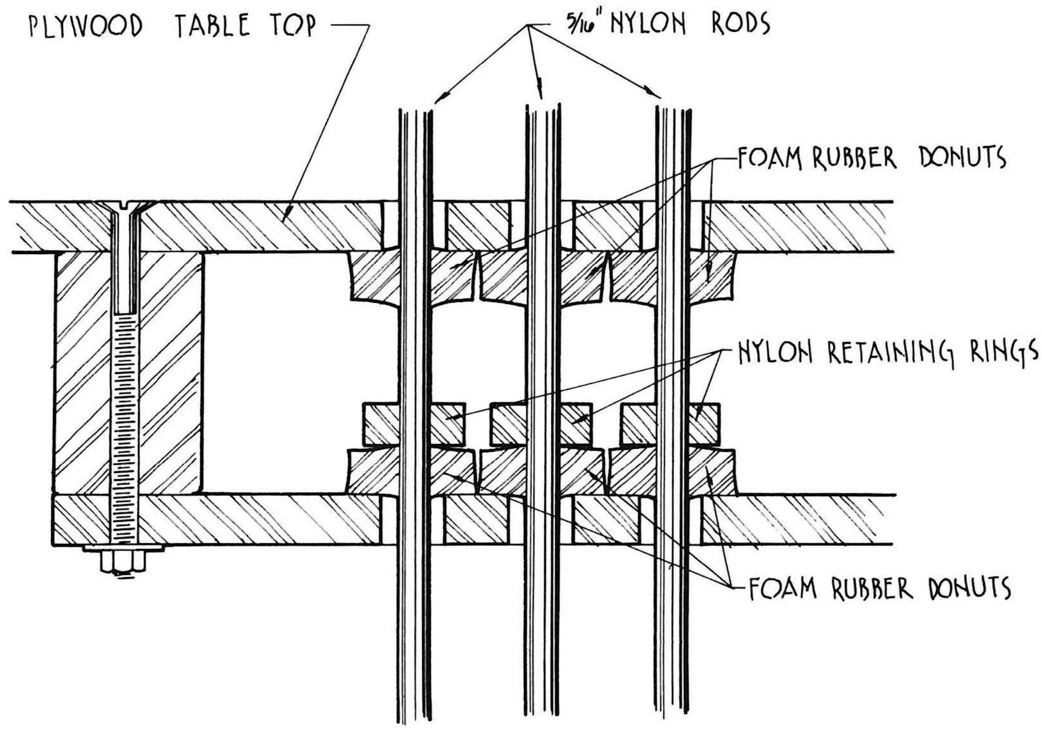

Cutaway of Nylon Rod Retainers

in a milling machine, or with a sharp and accurate table saw. Sand all machined surfaces with finer and finer sandpaper until you have a smooth surface free of machine marks. If the prism is sanded fine enough, you should be able to flame-polish it to optical clarity. A plastics supply house may be able to fabricate these for you if you do not have the necessary tools.

In a quick search I was able to find three companies with wedge prisms:

Ealing Optical 30 degree prism #24-3899
Rolyn Optical Wedge prism #48.1575
Melles Griot Wedge prism #02 PRW 011

The viewer is tied to the top with steel cable.

Related Exploratorium Exhibits

Cues, Dominant

Changing Squares; Cows; Distorted Room; Far-Out Corners; Floating Rings; Horse and Cowboy; Impossible Triangle; Reverse Distance; Reverse Masks; Size and Distance; Trapezoidal Window; Cardboard Tube Syllabus.

Learning, Relearning

Speech Dissector; Depth Spinners.

Depth Perception

Vasarely Movement Study; Cross Eye/Wall Eye; Cheshire Cat; DEWA Hologram; Inferno; Distorted Room.

Habituation

Watchful Grasshopper; Hot or Cold Chimneys; Sweat Detector; Blood Vessels of the Eye.

Perception of Spacial Orientation

Balance Beams; Brine Shrimp Ballet; Momentum Machine; Muscle Stretch; Rear View; Recollections.

Reach for It

With a little patience, you can adapt to a new view of the world.

To do and notice

Reach underneath the table and wiggle one of the red sticks.

Hold the goggles in front of your eyes with one hand. With the other hand, reach under the table and try to wiggle one of the red sticks without touching the other sticks. Notice how far off you are and in which direction.

Keep trying. It may take as many as twenty tries before you can touch only the red stick.

When you succeed, remove the goggles. Now try to touch only the red stick. Notice how far off you are and in which direction.

What's going on

Normally, your tactile sense and your visual sense agree. You rely on your eyes to tell you where the red stick is, so that you can reach out and touch it.

These goggles shift your visual field. Something that appears to be right in front of you when you look through the goggles is really slightly to one side. When you try to touch the red stick, you find yourself reaching too far to one side. After many tries, you learn to compensate for this visual distortion. When you remove the goggles, it takes a few seconds for you to shift back to your normal view of the world and reach for the stick where you see it.

So what

People have a remarkable ability to compensate for and adapt to conflicting sensory cues. In one experiment, a researcher wore eyeglasses that caused him to see the world upside-down. After a few weeks, he had adapted to his new view of the world, and the world looked upside-down only when he took the glasses off. When he removed the glasses, he had to relearn the world-eye relationship he had known before the experiment.

Two As One

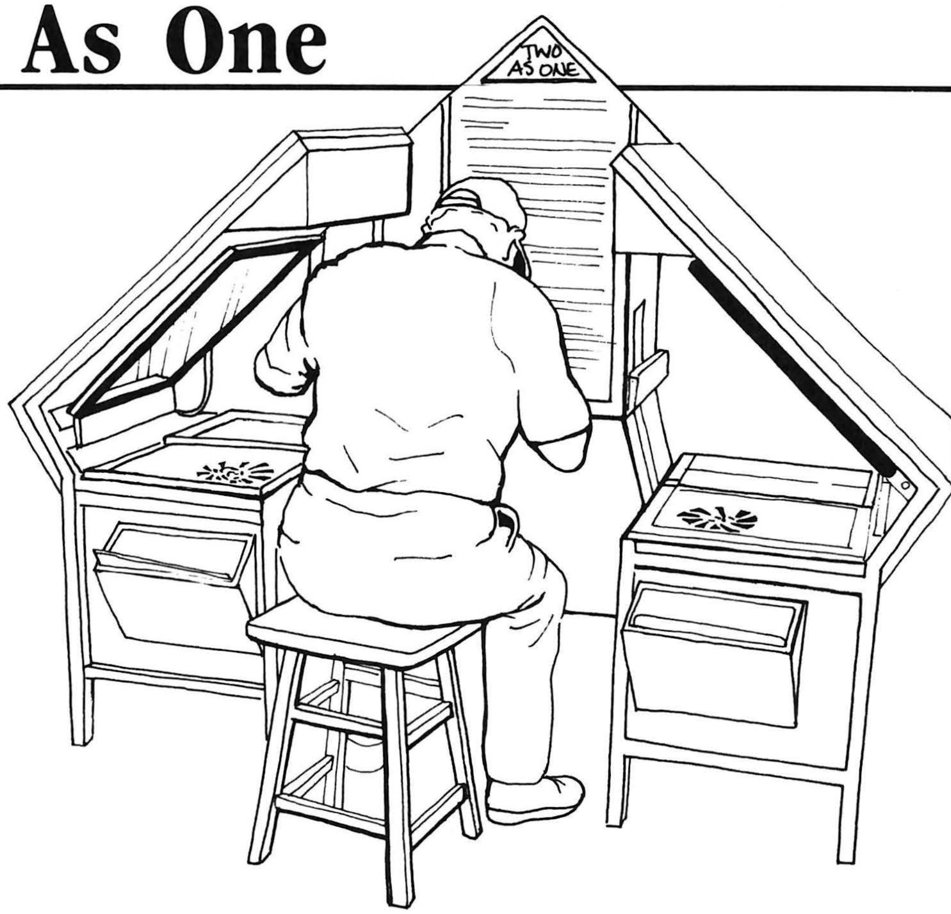

Description

Having two eyes enables us to assemble three dimensional scenes in our brain. Each eye receives a slightly different view; the two views are fused by the brain into the stereo scenes we are so familiar with. Two As One lets you to experiment with binocular stereo vision.

The visitor looks into a prism assembly which splits his/her vision so that each eye views a separate table top. Various laminated pictures and diagrams can be placed on the two table tops, where they can be viewed and fused into stereo images. The viewer can experiment with moving the pictures or switching them right for left.

Construction

Mirrors (17'' tall and 13-1/2'' wide) are placed at 45 degree angles to each of the two table tops, so that the images of objects on the tables are reflected towards the prism assembly. The prisms, one for each eye, are 45 degree-45 degree-90 degree prisms, 1-1/4'' square (used as right angle viewing prisms for telescopes). They are placed below the sheet metal viewing plate, which is curved up at the sides and has eye holes 2-1/2'' apart (be sure to leave room for peoples' noses!). Our prisms and face plate are fixed to a machined aluminum block held above the table on a 1'' square steel stalk. To get rid of reflections from the front surface of the 45 degree mirrors, we have placed polarizing filters in the prism holder and aligned them to cancel these unwanted ghosts.

Black sheet metal windows (4'' wide and 4-3/4'' high), placed between each of the prisms and its 45 degree mirror, block out all extraneous objects and present the visitor with a view of the table tops only. The windows are about 10'' from their respective prisms.

The 45 degree mirrors are mounted on plywood and are held to the exhibit frame with two bolts at the bottom corners and one bolt top center of the mirror mount. With this three-point suspension system the mirror can be adjusted by moving it along the bolts; it is held in place on the bolts with locknuts.

Each of the table tops is illuminated with two 8'' fluorescent lamps

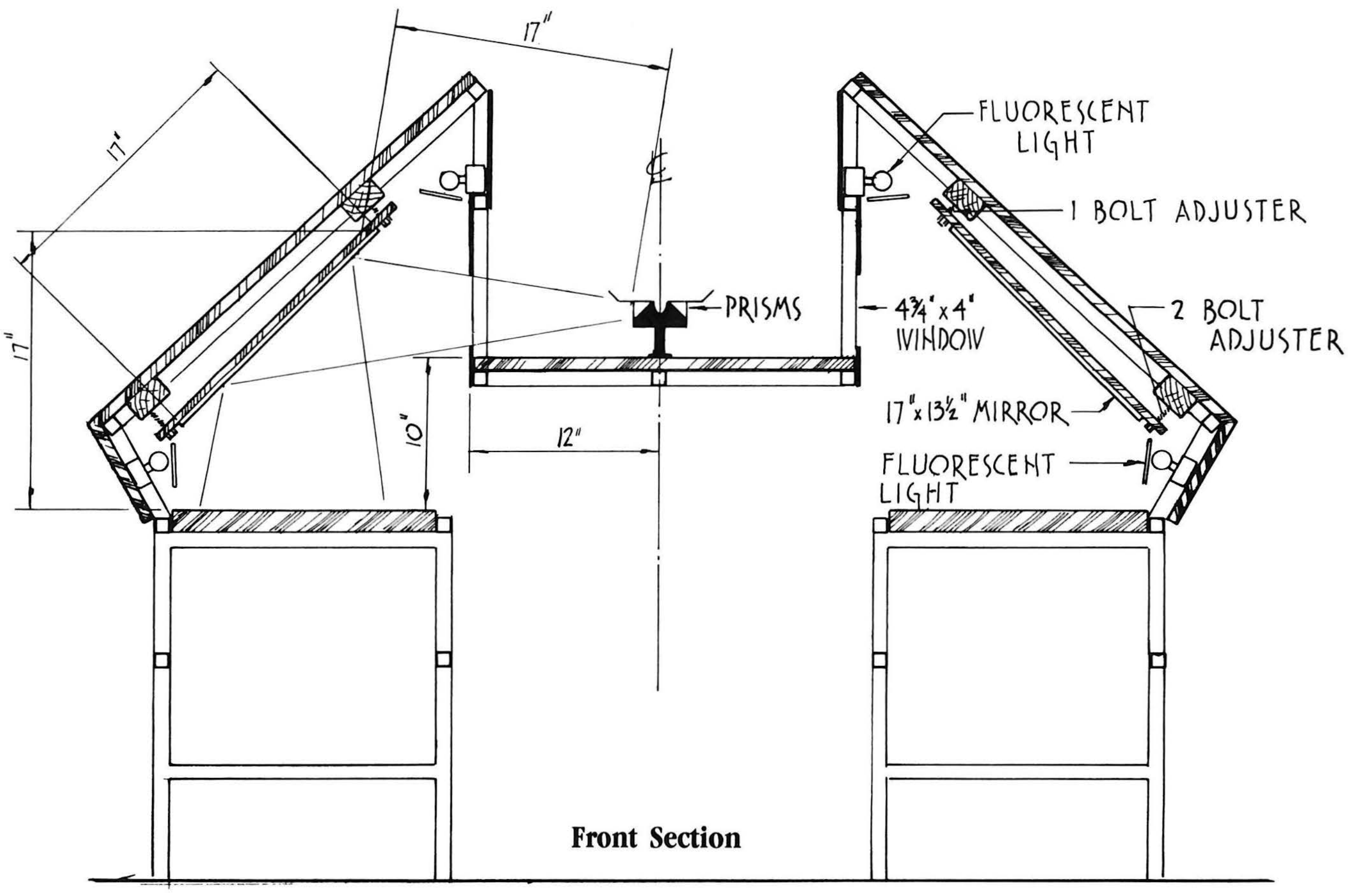

Front Section

behind white translucent plexiglas. One lamp is above the 45 degree mirror and points down, while the other is at the bottom of the mirror and points sideways. This combination gives fairly uniform illumination.

Below each table top is a box to hold the graphic images. We have provided 4 images in addition to the permanent stripes mounted under plexiglas on the table tops. They are:

1) A pair of stripes, red and green, with slightly different spacing to give a stereo effect;
2) A 3-D image (a graphic of a cone);
3) An image of letters which when fused in the brain spells out "TWO EYES," but says nothing when viewed separately. The letters on the two cards are different colors;
4) Two different faces, one male and one female, which can be fused into one. It is important to make the faces the same scale (eyes same distance apart) so that the brain can fuse them.

All graphics are plastic laminated. They last quite a while this way, though they would do better mounted on lexan. We've had no trouble with theft.

All components are mounted on a welded 1" square steel tube structure. See the diagram for the placement and distances of the optics.

Critique and Speculation

If welding is a problem for you, the frame of the exhibit can be made of wood—it might even turn out nicer that way.

If you can't find prisms, 45 degree mirrors can be used instead. Second surface mirrors should do fine and are easy and safe to clean.

Related Exploratorium Exhibits

Depth Perception

Depth Spinners; Reach for It; Inferno.

Binocular Vision

Cardboard Tube Syllabus; Cheshire Cat; Cross Eyes/Wall Eyes; DEWA Hologram; Eyeballs; Lightweight Phantoms; Moon Rocks; Professor Pulfrich's Universe; Random Dot Stereograms; Stereo Paintings; Stereo Rule; Stereo Viewers Old & New; 3-D Shadows.

Eye Rivalry

Eye Rivalry I; Cardboard Tube Syllabus.

Dominant Cues

Far Out Corners; Floating Rings; Horse and Cowboy; Impossible Triangle; Reverse Masks; Cheshire Cat; Cardboard Tube Syllabus.

Two as One

You can use this exhibit to create an artificial perception of depth and also to see what happens when your brain tries to combine two very different views.

To do and notice

Artificial Depth Perception

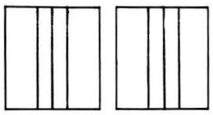

There are colored stripes painted on the left and right table tops of this exhibit. Remove any loose cards that may be covering the stripes. With both eyes open, look through the viewer at the red stripe, then look at the yellow stripe which appears further away. Notice that the blue stripe appears even further away.

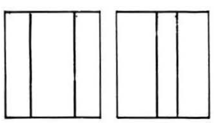

Find the two cards with red and green stripes. Place one card on each table top, with the red stripe on the right side of each card. While looking through the viewer, slowly slide one card sideways until you see only one red and one green stripe. Notice which stripe appears further away. Exchange the cards (switch the left with the right) and notice that the stripes are now reversed in depth.

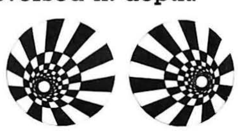

Place one of these cards on each table top. Stare at the center circle and adjust the cards until you see only one circle. Notice the shape of the three-dimensional image. Exchange the cards (switch the left with the right) and notice that the new three-dimensional image is now quite different.

Related Exhibits:
Stereo Rule
Stereo Viewers—Old and New
Reverse Distance
Cheshire Cat
Eyeballs

Eye Rivalry

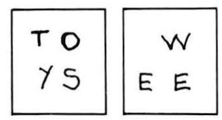

Place a lettered card on each table top. While looking through the viewer, adjust the letters so that the combined image you see is the phrase "TWO EYES." Notice how the letters tend to overlap with each other.

Place one photograph on the left side and one photograph on the right. Look through the viewer and adjust the faces until you overlap the eyes of each of the faces. Notice the new face you see when your brain fuses these two very different images. Keep looking at the faces and you will see new combinations as you pay attention to different details. Sweep your hand across one of the faces and you will see mostly that face. You can also replace one of the faces with the window card.

What is going on

We use many cues to determine how far away things are. One of the strongest cues arises from the fact that your two eyes see slightly different views of the world. The brain combines these views into a three-dimensional or stereoscopic image.

When you look at the red and green stripes, your two eyes see different pictures. If the two stripes seen by the right eye are closer together than the stripes seen by the left eye, the stripe on the right will look closer to you or above the other stripe. Conversely, if the stripes are closer together for the left eye than for the right, the stripe on the left will appear to be closer.

When your two eyes see totally different views, as with the faces and the window, you can't fuse the two pictures, and so you combine and recombine parts of each eye's view.

Color Vision

There's more to seeing color than meets the eye. Exhibits in this section demonstrate that color perception is more than just having three types of receptors (cones) in our eye that respond to long (red), medium (green), and short (blue) wavelengths of light. At *Orange Shadows*, for example, you can see how context affects your color perception. And in *Green Tomatoes*, you only need two colors of light to see a full color picture.

Color Vision Exhibits in Cookbooks I, II, and III:

Color Table

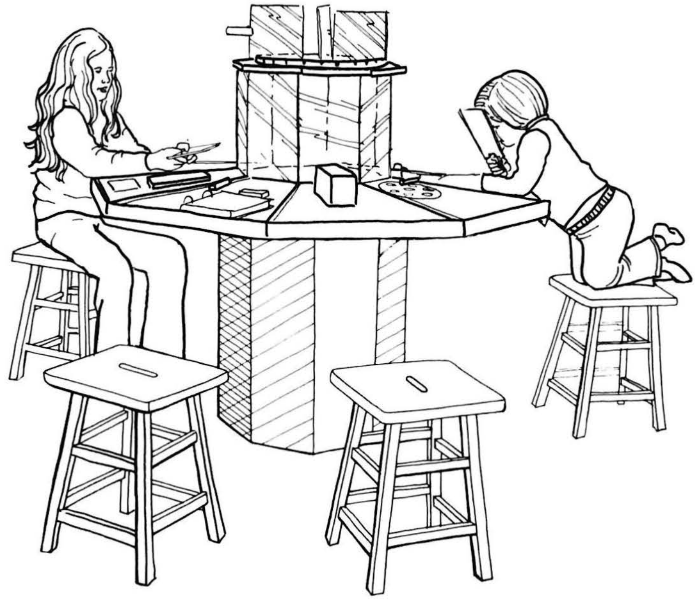

Description

A number of colored graphic displays, painted surfaces, and objects are mounted on an octagonal table. Red, green, blue, and yellow hand-held filters are placed around the table so the visitor can look through them at the various things on the table. If, for example, the visitor looks through a red filter at a graphic containing greens and blues, only very dark shades of gray will be seen. One graphic is written in a series of crayon colors. When viewed through the red filter, the reds, yellows, and oranges disappear, leaving behind the secret message written in blues and greens. The exhibit also has a small metal box with a hole drilled in its top. Even though the outside of the box is painted black, the hole seems "blacker than black." When the box is opened, one discovers that the inside is painted white—the hole only looks black because light that enters the box is absorbed before it can escape back through the hole. Also displayed on the table top is a set of six cards selected from the standard Ishihara color blindness test. Color blindness can be simulated somewhat by looking at the Ishihara test cards through colored filters.

Construction

This exhibit can take almost any shape and has evolved from a simple card-table to the rather nice wooden creation you see in this recipe. Feel free to design your own structure. Ours is octagonal in shape, with 22" edges at the outside of the octagon. The table top isn't quite flat, but slopes toward the visitor for easier access.

Illumination is provided from a 13" tall central plexiglas "light tower." This is another octagon with 7 1/2" sides made from solvent-cemented clear plexiglas panels. An inverted conical reflector is fixed to the wooden roof of this tower. This reflector is made from chrome plated brass sheet available from your local photography store as "ferrotyping plate" (used to make glossy prints). Lighting is provided by a 150 watt flood lamp, which is mounted beneath the table in the weighted octagonal pedestal. The lamp shines up through a hole in the table and onto the conical reflector, which sends it out through the plexiglas and onto the table top. This downward illumination limits the lighting to the immediate exhibit without much spill to the surrounding area. Ventilation is provided by holes in the pedestal and slots at the top of the plexiglas octagon.

The colored filters are standard theatrical filter gels placed between two 1/8" pieces of plexiglas that are riveted together. We also use colored 1/8" thick acrylic plastic filters. These are more durable and are easy to make, but the plastic is more expensive. The numbers of the filters are given below.

Plastic:	CRYO ACRYLITE: #210-0 (Red); #408-5 (Amber); #545-2 (Green); #668-0 (Blue)
Gels:	ROSCOLENE FILTERS: #823 (Medium Red); #807 (Dark Lemon); #874 (Medium Green); #857 (Medium Blue)

The filters measure 4 x 6". The short side fits into a slot in an 8" wooden handle and is bolted in place. The handles seem to help com-

municate to visitors that the filters belong to the exhibit; we don't tie these filters down and rarely have to replace them. Our filters are stored in a radially slotted disk on top of the light tower.

Some graphics are under plexiglas which is screwed to the table top, and some are laminated and have eyelets. The latter are fastened to the table with a large "U" shaped bolt (like large catalog binders).

The "Blacker Than Black" box is a standard metal 3x5 file card box painted black on the outside, white on the inside, and with a 3/8" hole drilled in its top.

Ishihara color tests are available from:

Benson's Optical
1257 San Carlos Avenue
San Carlos, CA 94070
tel: (415) 591-9503

These tests are available in sets of 10, 14, 24, and 38 plates ranging in cost from $52.50 to $102.00. If you protect the plates well enough, a set of ten should serve your purposes, though the larger sets have more variety.

Related Exploratorium Exhibits

Absorption
Color Table; Distilled Light; Frequency Excluder; Million to One; Stored Light; Wave Machine; Color Removal.

Color
Bridge Light; Dichroic Clock; Model of Color TV; Prism Tree; Selective Color Focusing; Soap Bubbles; Soap Film Painting; Spectra.

Color Mixing
Aurora; Colored Shadows; Sun Painting

Blackness
Light Change 2

Color Vision
Benham's Disc; Bird in the Cage; Color Contrast; Color Reversal; George Seurat's La Grande Jatte; Green Tomatoes; Orange Shadows; Starburst.

(Please note these graphics are incomplete and do not reflect all the different activities of the Color Table.)

Exploratorium Exhibit Graphics

Blacker Than Black

To do and notice

Notice that the inside of the box looks black when you see it through the hole.

Open the box.

What is going on

Black is the absence of light. Light that enters through the hole is repeatedly reflected inside the box. White paint absorbs only a fraction of the light that shines on it, but during the repeated reflections, it absorbs all the light that enters the box. No light escapes through the hole toward your eye.

So what

The apparent difference in color between "flat" black paint and "glossy" black paint results from differences in surface texture. Glossy paint forms a hard, smooth surface which reflects light in one direction. (This direction depends on the location of the source of illumination.) Flat paint looks dull because the surface texture is irregular, sending reflected light in all directions. You can feel the difference between flat and glossy paint. The latter is distinctly smoother, which also makes for easier cleaning.

Light reflects from a *smooth* surface in a specific direction that depends on the angle of the light in relation to the surface. This is called *specular reflection.*

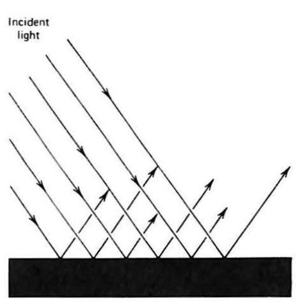

Light reflects from an *irregular* surface in all directions. This is called *diffuse reflection.*

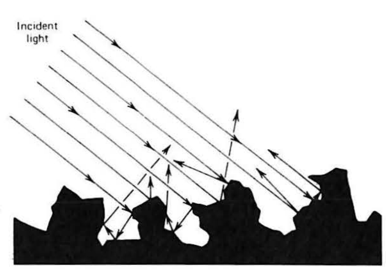

Color Table

To do and notice

Look at the various pictures and designs through the assortment of filters. You will see some surprising changes.

What is going on

When you look through a red filter at a message written in red letters and green letters, the red letters disappear and the green letters look black. When you look through a green filter, the green letters disappear and the red letters look black.

Under normal circumstances, the red letters look red because they reflect red light to your eye. The paper looks white because it reflects all colors of light, and these colors combine to make white. The red filter is red because it transmits red light and absorbs all other colors of light. It transmits only the red component of the light reflecting from the white paper. It also transmits the red light that reflects from the red letters. Since your eye receives the same amount of red light from both the paper and the letters, you can't tell the difference between the two.

The green letters reflect only green light. When you look at them through a red filter, the filter absorbs the green light, and the letters look black.

As you experiment with other color filters, notice what colors are transmitted by the filter and what colors are not.

Orange Shadows

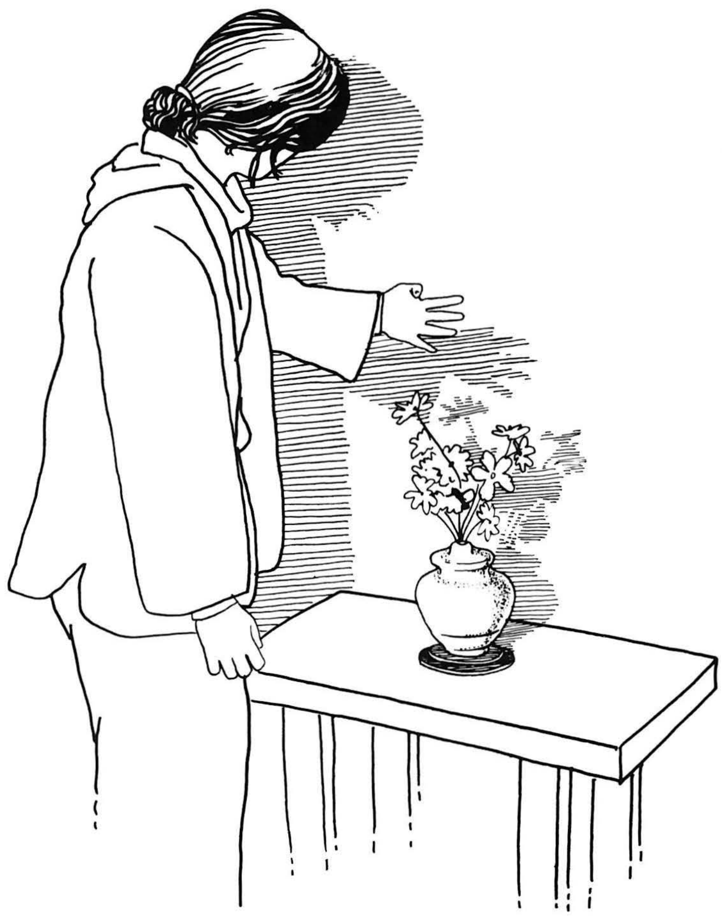

Description

Your eye defines white by looking for the brightest object around. In this exhibit, a blue lamp shines on a vase of flowers standing in front of an internally illuminated white plastic box. Since your eye-brain system has defined the bright blue as white, it determines that the shadow is white minus the blue light, or orange.

Construction

A split ring is clamped to the base of the vase and screwed to the top of the short table. The fake flowers are fixed in place through holes in the vase bottom and table top.

The table sits in front of a white translucent plexiglas box that is taller than the flowers. The box is illuminated from within with a standard light bulb. The intensity of this light bulb is critical, since too bright a bulb will wash out the shadow. You will want to play with wattages, and maybe even put a light dimmer in the circuit for experimentation—once the illumination is established, the dimmer can be fixed in place with tape.

We use a standard outdoor blue dichroic flood lamp as the blue light source. These are available in many hardware stores or at your local lighting suppliers. The flood lamp is mounted quite high off the ground and shines down on the vase and illuminated box.

Critique and Speculation

The internally illuminated box can seem quite mysterious. You might try mounting both the white and blue lamps high up but separated so that their shadows don't intersect much. This method should work just as well and you won't have to build a plexiglas box—just use a wall.

Exploratorium Exhibit Graphics

Orange Shadows

To do and notice:

Notice that the vase and the flowers look white even though they are illuminated by a blue light.

The flowers produce a shadow on the paper behind them. You can also produce a shadow with your hand. Normally such shadows look grey or black but in this case the shadow looks orange.

What is going on:

There is no absolute definition of "white." A white piece of paper looks white in sunlight, fluorescent light, incandescent light or even if you wear rose-colored glasses.

Even though blue light is shining on the vase, the vase is the whitest thing around and you decide that it is white. The paper behind the vase looks almost white even though it is lit by a white light from behind and the blue light from the front. When you make a shadow with your hand or with the flowers by removing the blue light, the paper which looks white becomes white minus blue in the shadow or orange.

This effect of colored shadows is often used in theatrical lighting.

Edwin Land, (see exhibit, Green Tomatoes) discovered that the colors seen in the context of colored objects can't be predicted just through the study of meaningless blotches of colored light.

Related Exploratorium Exhibits

Color Vision

Benham's Disc; Bird in the Cage; Color Contrast; Rainbow Edges of Your Eye; Color Reversal; Color Table; George Seurat's La Grande Jatte; Green Tomatoes; Starburst; Bridge Light; Peripheral Vision.

Inhibition

Stereo Sound I & II; Subjective Contours; Selective Hearing; Cheshire Cat; Cardboard Tube Syllabus.

Shadows

Shadow Box; Colored Shadows; Sun Dial; Professor Pulfrich's Universe; Sophisticated Shadows; Does Your Back Curve; Blood Vessels of the Eye; Convection Currents; Suspense; Air Reed; Polaroid Projector; Recollections.

Refraction

Light travels in straight lines, but it can change direction on its way from its source to your eyes. The exhibits in this section provide numerous examples of what happens when light changes its direction by getting bent (refracted). Light often bends when it changes speed as it passes from one medium into another—air to glass for example. Light fans out into rainbows as it bends through prisms, and focuses into images as it bends through lenses. In the *Water Sphere Lens*, a round flask of water bends light to create a clear focused image of a light bulb. Bending paths of light can make tiny ants look like giants, hot dry roads look like distant ponds, and stars twinkle in the night.

Refraction Exhibits in Cookbooks I, II, and III:

Image Quality

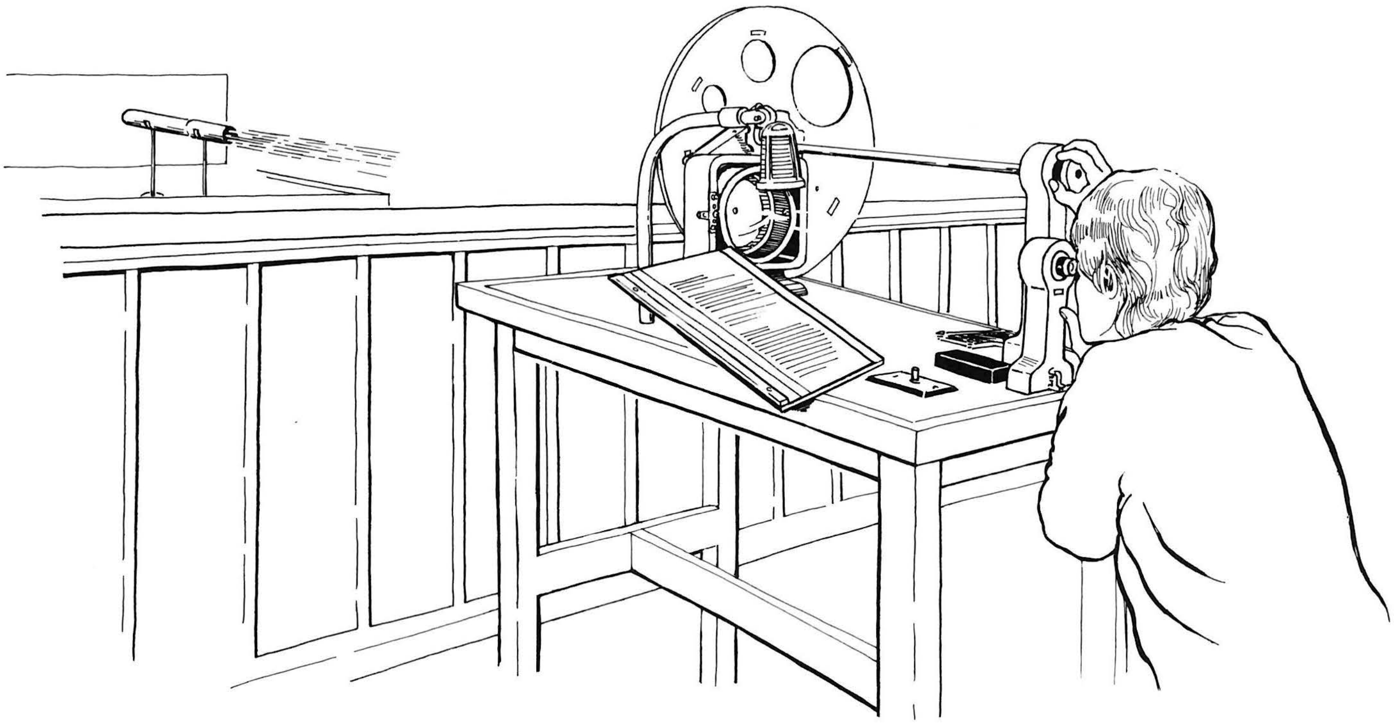

Description

This exhibit demonstrates two properties of optical systems that affect image quality. When lenses are very large, spherical aberration reduces image quality due to the smearing out of the focal point—the outer areas have a shorter focal length than the central parts of the lens. If the lens is very small (compared to its focal length), its image resolution is reduced by diffraction.

The visitor looks through an eyepiece at the image of a light bulb placed quite a distance from the exhibit. Each of several different apertures on the circumference of a large disk can be positioned in front of the lens. Starting with the largest aperture, one notices that the image quality increases as the aperture size is reduced; but after a certain optimal aperture size, any further size decrease causes a decrease in the image quality.

The eyepiece can be tilted out of the way and the image focused on a frosted plexiglas screen.

Construction

You'll need a light source, objective lens, aperture wheel, eyepiece, and focusing screen.

The light source is a 200 watt clear incandescent bulb with a straight vertical filament (we use this bulb in other exhibits, like *Light Island* in this Cookbook). Our exhibit sits at the edge of our mezzanine, and we've placed the light bulb on top of our store, about 40 feet away—this way no one can walk or stand in the way. To keep the lamp from illuminating everything nearby, it is housed in a 6 foot long cardboard tube which points at the exhibit and is supported by a short wood stand. It is important to give the visitor control over the brightness of the lamp: when a large aperture is used, 200 watts is uncomfortably bright, while all 200 watts are needed to see the image with a small aperture or the frosted glass screen. We use a standard household dimmer and a very long cord strung over the canyon between the mezzanine and the store. Another possibility would be to use a BSR remote lamp dimmer unit and controller, available from Radio Shack or other electrical supply house.

The objective lens is the hardest component to find. Ours is a 6'' diameter, 30'' focal length achromatic lens that we scavenged from some piece of surplus equipment. If you don't just happen to have a lens like ours, check with your local astronomy clubs, surplus stores, optics shops, and scientific supply houses. Good luck.

The aperture wheel assembly is mounted on the objective lens frame—note that our objective lens is elevated on a block to accommodate the size of this wheel. Because the objective lens is at the back of the table,

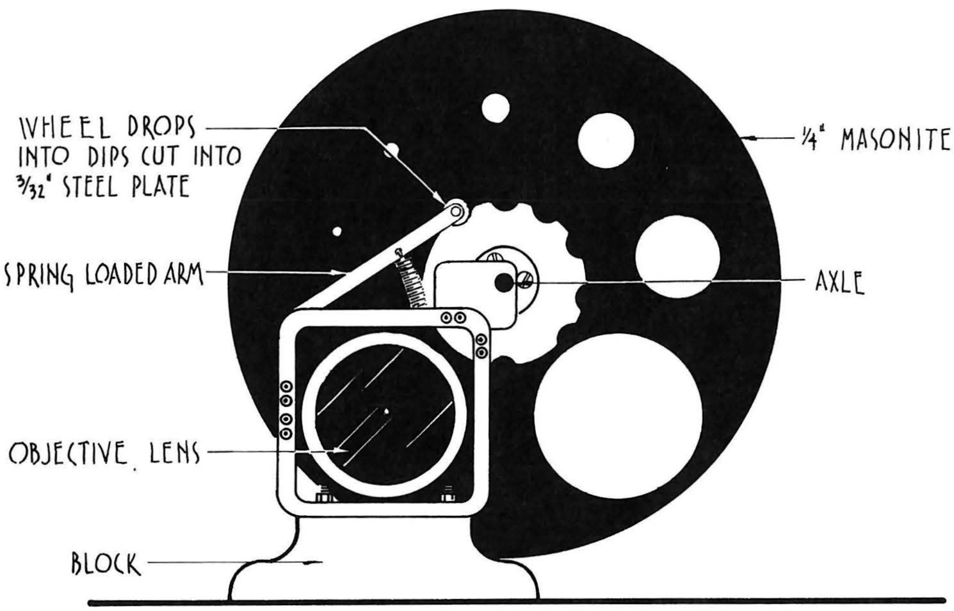

Lens with Apertures and Stop Assembly

the axle of the aperture wheel is brought forward through a wooden block and bushing and has a nice large knob on the user end. It is important that the apertures are centered in the lens. We use a simple spring-loaded stop mechanism to position the holes in the wheel properly (see diagram). We have drilled 8 holes (with their centers all at the same distance from the axle) to give the following f/numbers: f5, f10, f15, f30, f60, f80, f120, f240. The f/number is simply the focal length of the objective lens divided by the diameter of the lens (or aperture). Be sure to place the aperture wheel as close to the lens as possible.

The eyepiece is a standard 15x W.F. microscope eyepiece. Get this one from a local supplier of microscope parts or an optical repair shop. The eyepiece is installed in a wooden stand, which is fixed in place on the table (about 30'' behind the objective lens) so that the image of the lamp is in focus. The wooden stand is hinged and can be pivoted forward and out of the way, so that the frosted plexiglas focusing screen (which is cabled to the table top) can be used in its place. Frosted plexiglas is available from your local plastics supplier as ''rear projection screen'' material. We've put a cabinet latch on the front bottom (in plain sight) of the eyepiece mount to hold it in the upright position. A rubber pad on the table protects the eyepiece when the mount falls back.

Critique and Speculation

It would be nice to have a simple focusing device on the eyepiece to accommodate different people's eyes. We used to let the eyepiece slip in and out of a tube, but people kept poking themselves in the eye. A good rack and pinion or screw focuser would work much better.

Related Exploratorium Exhibits

Diffraction

Diffraction; Glass Catfish; Points of Light; Water Waves; Hologram-Skull; Long Path Diffraction; Spectra; Iron Sparks; Laser Demonstration; Blue Sky; DEWA Hologram; Solar Signature; Color Temperature.

Refraction

Disappearing Glass Rods; Bathroom Window Optics; Leyes Photos; Conversation Piece; Glass Bead Rainbow; Multiple Lens Box; Rainbow Edges in Your Eye/Lens; Rainbow Encounters; Water Waves; Color Removal; C the Light; Sun Painting; Convection Currents; Glow Wheel.

Pinholes

Pinhole Sun Telescope; Pinhole Magnifyer; Cracks in a Door; Holes in a Wall.

Image Formation, Lenses

Critical Angle; How Many Stars?; Jewels; Lens Table; Magnifying Glass; Optical Bench; Traffic Light; Cow's Eye Dissection; Eyeball Machine; Giant Lens; Image Relay; Three-D Dots; Air Reed; Light Island; Color Sum; Heat Rays & Light Rays.

Image Quality

This exhibit shows that if a lens opening is either too big or too small, it will not produce the best image.

A telescope or camera gathers light from distant objects and focuses this light to make an image.

Good camera lenses are expensive because they use accurately spaced combinations of several lenses to produce sharp images even when the lens opening is large. Unlike a camera lens, this exhibit has only a single light-gathering lens. This lens is an especially good composite lens made of three lenses glued together and, like a camera lens, it is color corrected: it focuses red, green, and blue light in the same place.

The numbers on the wheel - f30 and so on - correspond to the size of the hole and are like the f stops on a camera. The f stop numbers that are on the wheel and on a camera lens setting are equal to the focal length of the lens divided by the diameter of the hole. The smaller the hole, the bigger the f stop number.

To do and notice:

Turn the aperture wheel so that the one-inch (f30) hole is centered in the lens.

Look through the eyepiece at the light bulb on the roof of the store. Adjust the bulb's brightness and the eyepiece to get the best image.

Turn the wheel so that you are looking through a larger or a smaller hole. Notice that the image gets fuzzy. You can adjust the bulb's brightness for each hole size.

In the image you see through a larger hole, notice that a halo of light surrounds the image of the filament. In the image you see through a smaller hole, notice that the separate coils of the filament merge together.

Release the eyepiece holder, lower it to the table, and adjust the bulb to the brightest setting. Hold the viewing screen where the eyepiece was. Notice the tiny image of the filament on the screen. Try different hole sizes and watch what happens to the image.

What is going on:

Image quality deteriorates when a lens opening is either too big or too small.

The focal length of a lens is the distance from the lens to the image it produces of a distant object-- in this case, a light bulb. The outer regions of a lens have a shorter focal length than the central region and they focus images at a different place in space than does the center of the lens. When the lens opening is too large, the unfocused images from the outer part of the lens make a halo of light that obscures the images focused by the center of the lens.

You see the clearest image through the f30 hole. With this size opening, the images from the outermost edges of the exposed lens are focused at about the same distance from the lens as the image from the center.

When the hole is too small (f60 or smaller), the image gets fuzzy for a different reason. Light shining through a small hole is diffracted: it spreads out from the opening. The smaller the opening, the greater the diffraction. (See LONG PATH DIFFRACTION exhibit or WATER WAVE exhibit.) Because the light from each coil of the filament spreads out, the images of the separate coils of the filament overlap to make a smoothed-out image of the entire coil.

A good compound camera lens focuses the image formed by the center of the lens and the images formed by the outer edges at the same point in space.

Recipe No. 168

Water Sphere Lens

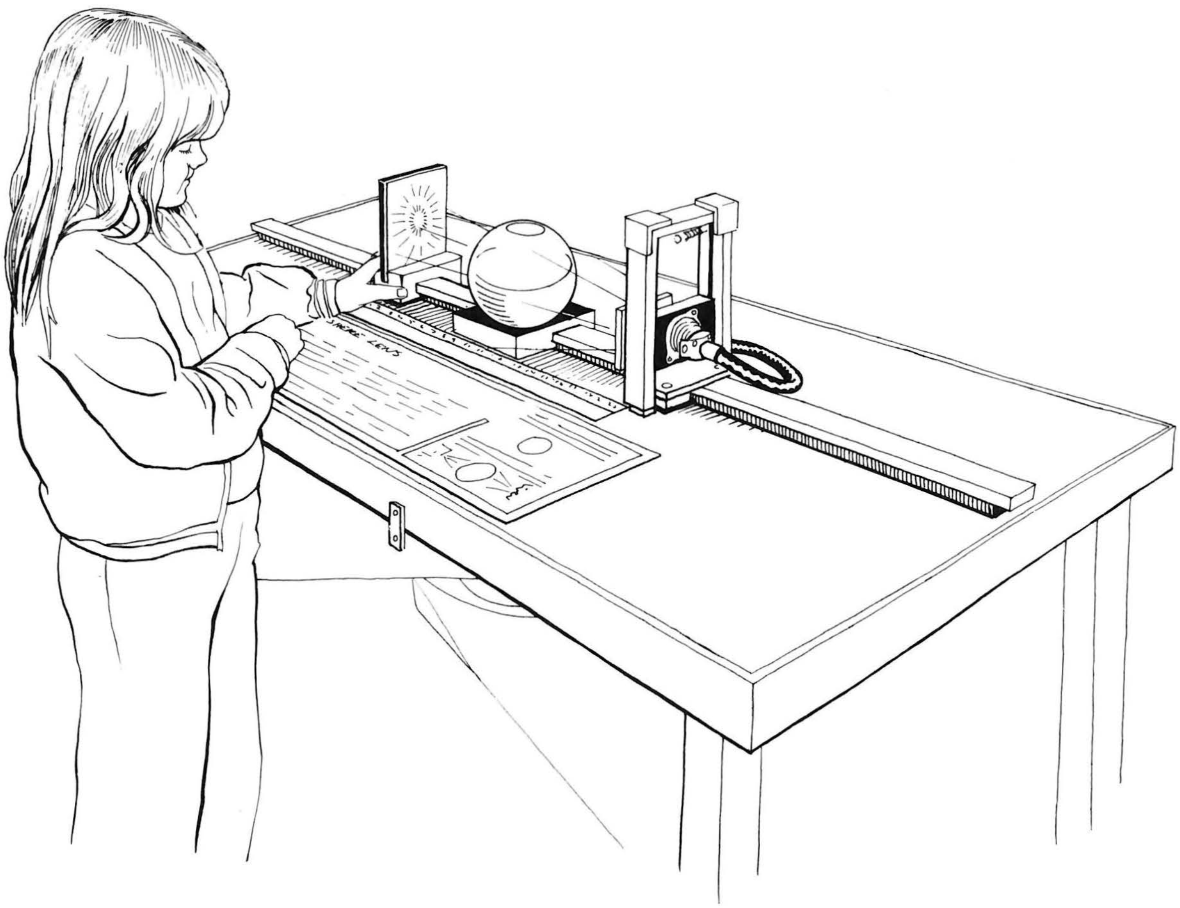

Description

This companion exhibit to *Conversation Piece* (a carbon dioxide filled balloon that focuses sound) demonstrates the focusing of light through a spherical lens. A movable light source sits on one side of the spherical lens, with a movable white screen on the other side. At certain positions along the table top the filament of the lamp is sharply focused on the screen. The lamp can also be moved up and down in its mount, so you can see that the upside-down image moves in the opposite direction.

Construction

The "lens" that we use is a 1 liter round-bottom flask filled with water. The flask is upside-down with its neck extending through the table top. A split ring clamp holds the neck of the flask in place below the table. We leave a small bubble of air in the flask to demonstrate its liquid contents.

Both the screen and the light bulb assembly slide along a "T" shaped hardwood track (the bases of both mounts have "T" shaped keyways that fit the track). Stops are screwed to both ends of the track.

We use a 7-1/2 watt 120 volt lamp, which is about the right brightness. It's mounted in a small fixture and is connected to a power source with wires that run through a flexible metal conduit which comes from a hand-held shower device (much more flexible than regular electrical flex-conduit or goose-neck lamp conduit). The conduit passes through a slot cut in the table top behind (and parallel to) the "T" track. A clear plastic guard in front of the lamp keeps it from being unscrewed.

Light Source Detail

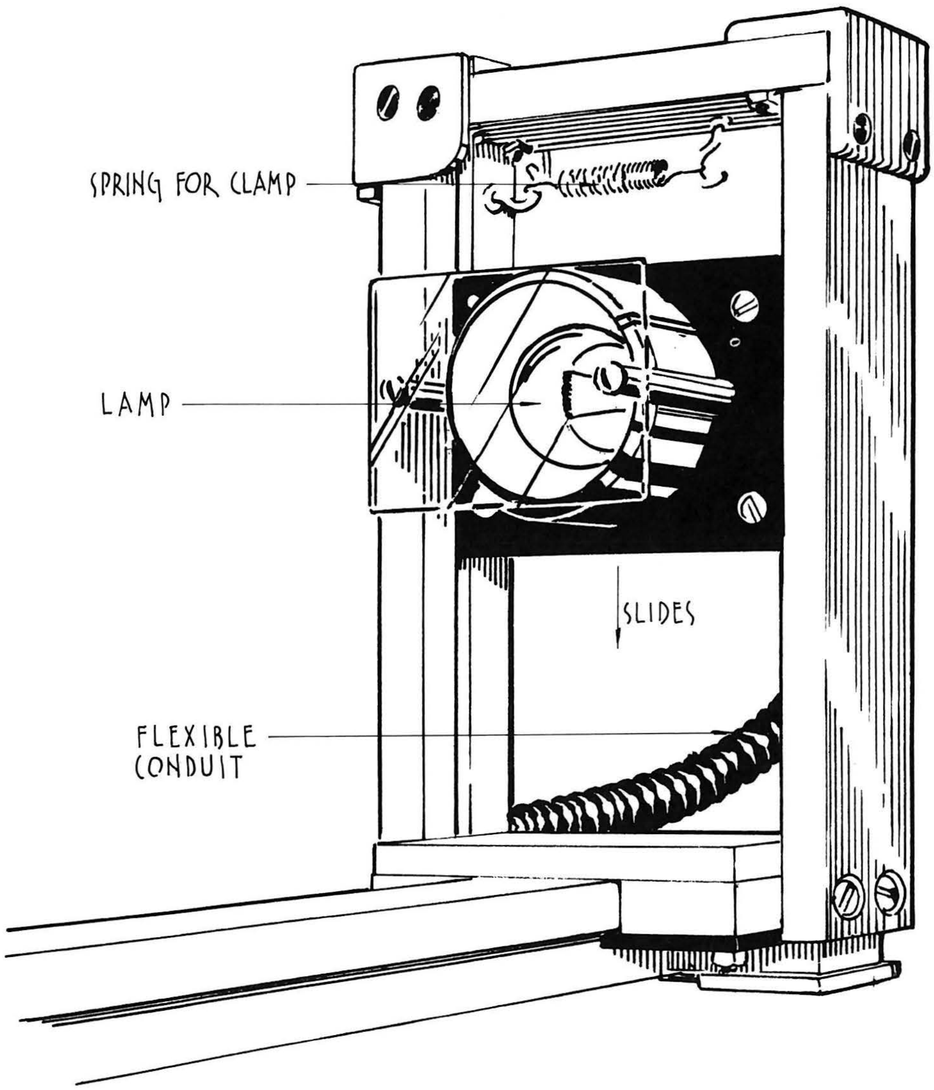

The lamp mount slides up and down in slots in a three-sided hardwood frame. One of the vertical members of the frame is fastened at the top with a spring that pulls it towards the other side; this way you can slide the lamp easily, yet the spring holds it in place when you let go (see diagram of lamp mount). Laminated graphics on the table top provide a scale along the tracks and label the focal points of the lens.

The table also houses the CO_2 cylinder and associated regulator and valves for the *Conversation Piece* balloon, which lives next door.

Related Exploratorium Exhibits

Refraction

Disappearing Glass Rods; Bathroom Window Optics; Critical Angle; Leyes Photos; Conversation Piece; Glass Bead Rainbow; Multiple Lens Box; Water Waves; Image Relay; C the Light; String Analogy; Sun Painting; Convection Currents; Image Quality; Laser Demonstration; Air Reed; Rotating Light; Prism Tree.

Image Formation, Lenses

Critical Angle; How Many Stars; Lens Table; Magnifying Glass; Optical Bench; Traffic Light; Cow's Eye Dissection; Eyeball Machine; Eyeballs; Telescope; 3-D Dots; Heat Rays & Light Rays; Low Frequency Light.

Water Sphere Lens

To do and notice:

Push the light carriage all the way to the right. Move the screen back and forth until a small, focused image of the bulb appears. The screen will be near the number 6 on its scale.

Slide the lamp housing up and down. Notice that when the light goes up, the image goes down.

Put the screen at 10, and move the light until the image is focused. The light carriage will then also be at 10 on its scale. This is a special case: the source and image are equal distances from the lens.

The sound lens "Conversation Piece" uses this special case since the benches are equal distances from the balloon.

What is going on:

When light or sound passes from air into a substance which slows the light or sound, a bending usually takes place. This bending can focus the light or the sound so that the light or sound does not keep spreading out into space but converges on the other side of the sphere.

Light waves that are emitted by the light bulb are bent upon entering and leaving the water-filled sphere and are thus focused (or concentrated) as an image on the other side of the sphere.

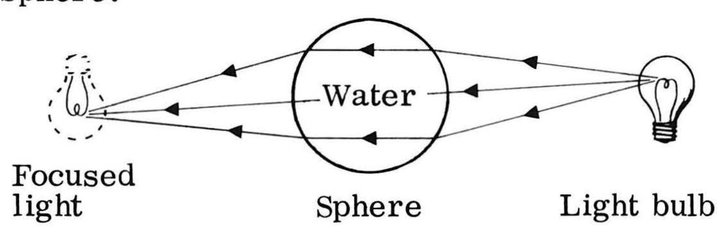

A similar thing occurs when sound waves travel through the Carbon-dioxide-filled balloon in the exhibit "Conversation Piece".

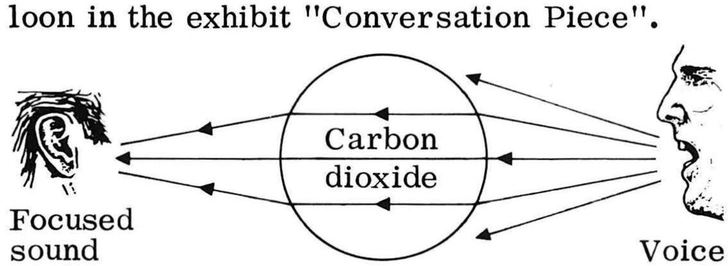

Reflection

Everything you see is either making or reflecting light. Light bulbs and stars and fireflies create their own light. But almost everything else—including you—basks in and reflects light made somewhere else. Most of the exhibits in this section use mirrors or very smooth surfaces to reflect light. Mirrors are special because they reflect almost all of the light that hits them. The smoother you make a surface, the more mirror-like it becomes. Rather than getting scattered in many different directions, light that hits smooth surfaces gets reflected in regular patterns. Exhibits in this section use flat, concave and convex mirrors to make images appear out of thin air, multiply images into infinity, move images around and spread them out, and even turn a window into a mirror and make a person seem to fly through the air.

Reflection Exhibits in Cookbooks I, II, and III:

Anti-Gravity Mirror

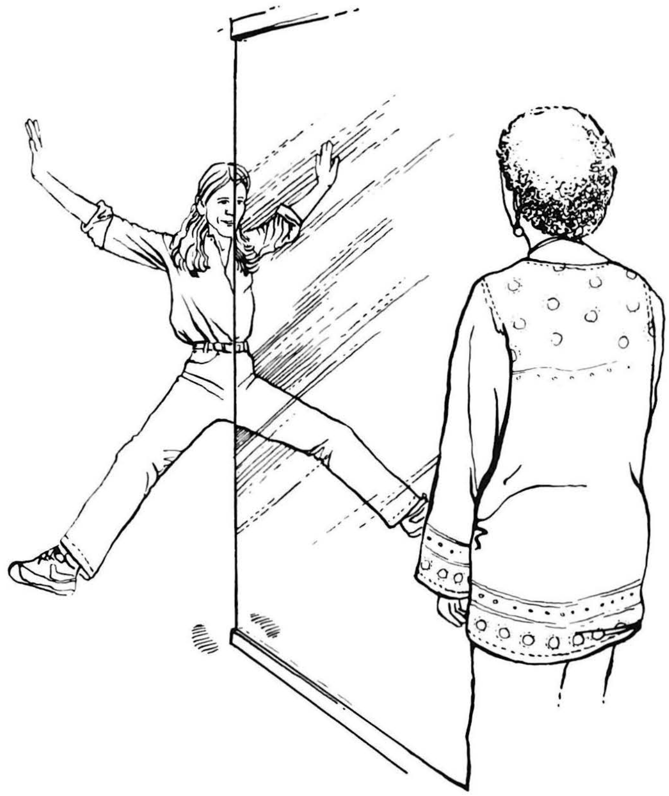

Description

This exhibit demonstrates symmetry in mirror reflections. A visitor stands with the edge of a large mirror bisecting his or her body. To another visitor watching, the person still looks whole because of the two-fold symmetry of the human body. The fun begins when the first person starts moving. If that person lifts a leg off the ground, for instance, the observer will see both legs lift, leaving the performer without visible means of support. Our Explainers have developed sensationally funny presentations with this simple exhibit (see the Nova episode "Palace of Delights").

Construction

The exhibit is simply a very large glass mirror mounted vertically in a suitable frame.

Our mirror is 1/4" thick and measures 7 feet tall and 6 feet wide. Try to get as flat a mirror as possible—distortions tend to ruin the effect. To keep the mirror flat we have mounted it on a piece of 3/4" plywood (this also keeps it in place in case of breakage—see below). The mirror is glued on the wood with a thin 24 hour epoxy. With the plywood lying on a large flat bench, pour the epoxy generously onto the wood surface. Lightly place the mirror on top of the glue and allow it to "float" in place without clamping—the mirror's weight will provide enough pressure. Hopefully the glue will spread uniformly and dry overnight without leaving the mirror resting on glue "islands." Remember, the point of all this is to keep the mirror flat and free of distortions.

The frame is built with 2x4's, rabbeted so the 1" thick mirror-plywood can be inset flush, with 1/4" border of wood around the perimeter (see diagram). There is a vertical 2x4 support running down the center of the frame. For durability, a maple facing is added to the edge where people touch their nose and body. The mirror is held in this frame by maple molding, top and bottom, which is screwed in from the front. The top of the frame is held to the wall with a structure of welded square steel tube.

To show people where to stand (for those who can't or don't bother to read the exhibit graphics) we have painted footprints on the floor.

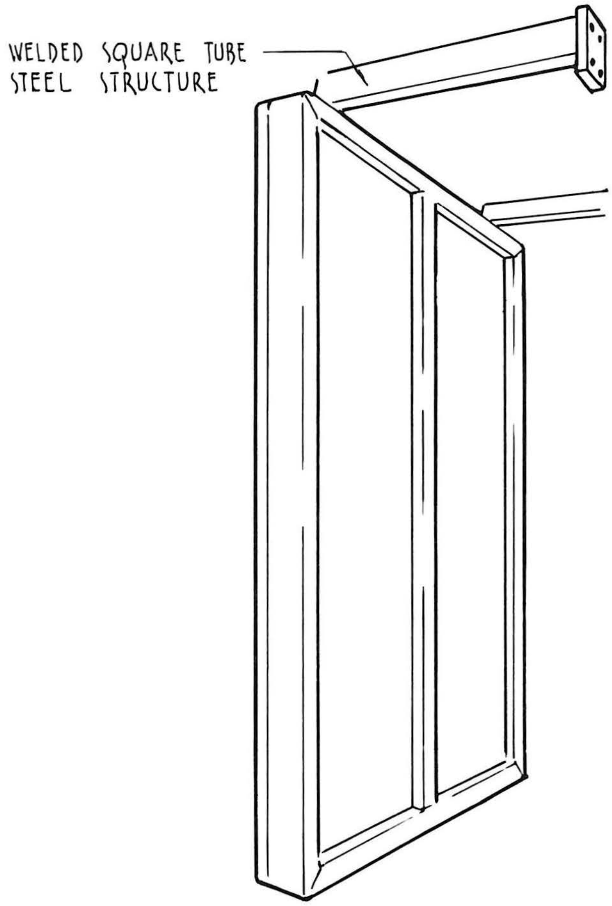

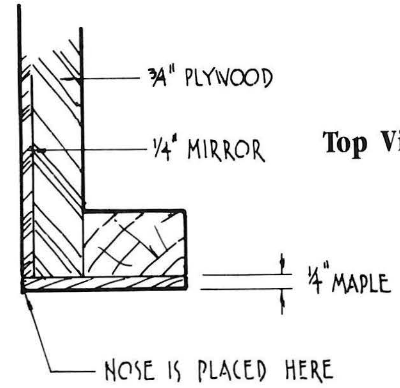

Top View

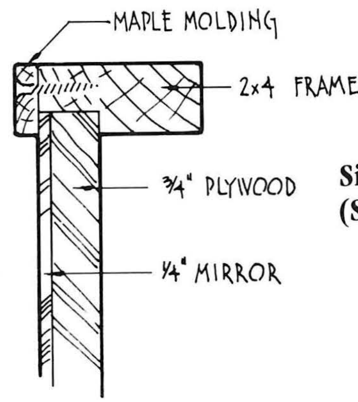

Side View (Section)

Critique and Speculation

If you can find a tempered glass mirror the gluing can be avoided by using the mirror as-is, with the plywood simply as a backing. If a tempered mirror breaks, it shatters into millions of pieces that typically do no harm. Plate glass mirrors should be glued to a back support since they break into razor sharp knives that could easily injure someone.

Anti Gravity Mirror update

We have recently added an additional 9-inch-wide mirror to the end of the large mirror opposite the performer. This mirror, which is as tall as the big mirror, is carefully placed at 90° to the big mirror—forming an "L." This new mirror allows the performer to see him/herself and adjust position and movement.

Exploratorium Exhibit Graphics

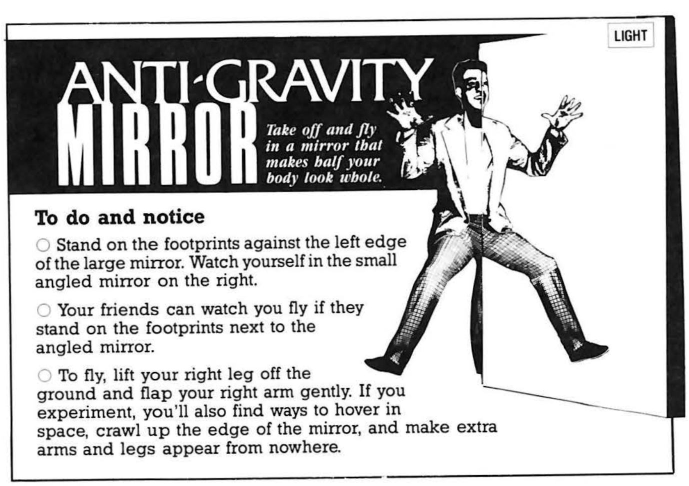

Related Exploratorium Exhibits

Reflection Plane
Corner Reflector; Duck Into Kaleidoscope; Everyone is You and Me; Look Into Infinity; Primary of a Cube; Mirrorly a Window; Shadow Kaleidoscope; Porro Prism; Rear View.

Image Formation
Shake Hands With Yourself; Touch the Spring; Parabolas; Christmas Tree Balls; Hot Spot; Image Mosaic; Retroreflective Lens.

Symmetry
Door is a Lensless Camera; Bathroom Window Optics; Steinberg.

Corner Reflector

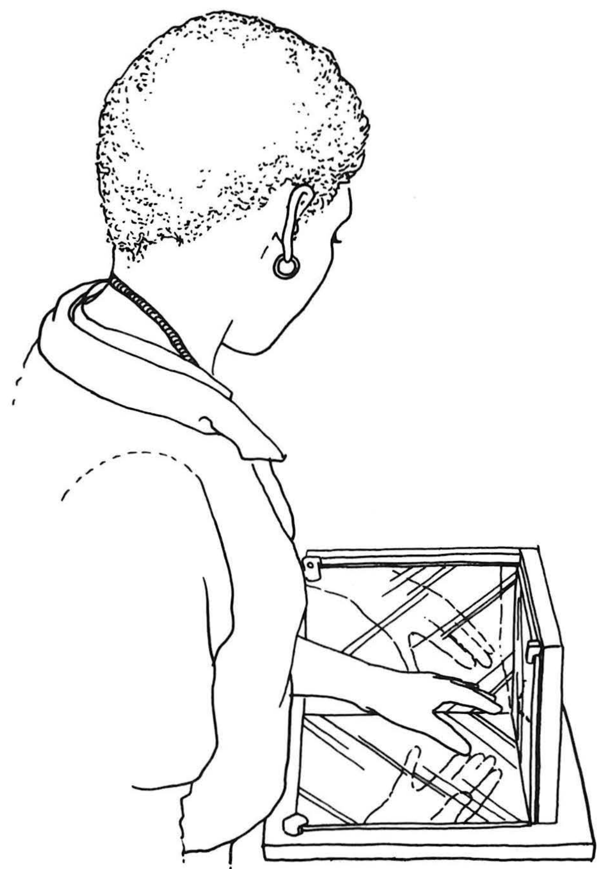

Description

Three mirrors arranged perpendicularly form an interesting type of reflector. Light rays that enter the corner exit along parallel paths equidistant from the vertex of the three mirrors. When visitors look into this set of mirrors, they see themselves with their dominant eye centered at the vertex. A reflector of this type was left on the moon by the Apollo astronauts, enabling scientists to determine the distance to the moon (to an accuracy of 6 inches) by timing a laser beam's voyage to the reflector and back to earth. Bicycle reflectors and the plastic tail lamps on cars have similar corner-reflecting properties.

Construction

This is a simple exhibit to build. You need three mirrors and some sort of mounting to support them.

First surface mirrors (with the reflective coating on the front surface) are normally very delicate and prone to scratching. Because the first surface mirrors in this exhibit are exposed to public handling, we had mirrors made specially for this purpose. We cut good grade float glass (very flat) to 7-3/4'' squares, which we sent out to be aluminized and sapphire overcoated. The sapphire overcoating is expensive ($350.00 for 15 mirrors of assorted sizes in September 1981) and gives the mirrors a purplish hue, but it's extremely hard and extends the life of the mirrors tremendously. The aluminizing and sapphire overcoating was done by:

Uvira
P.O. Box 610
Merlin, OR 97532
telephone: (503) 474-5050

Our mounting is made of 5/16'' thick aluminum (see diagram), but 1/4'' stock is easier to get and works fine. The aluminum is bolted together with button head screws. Note that next to each screw is another hole

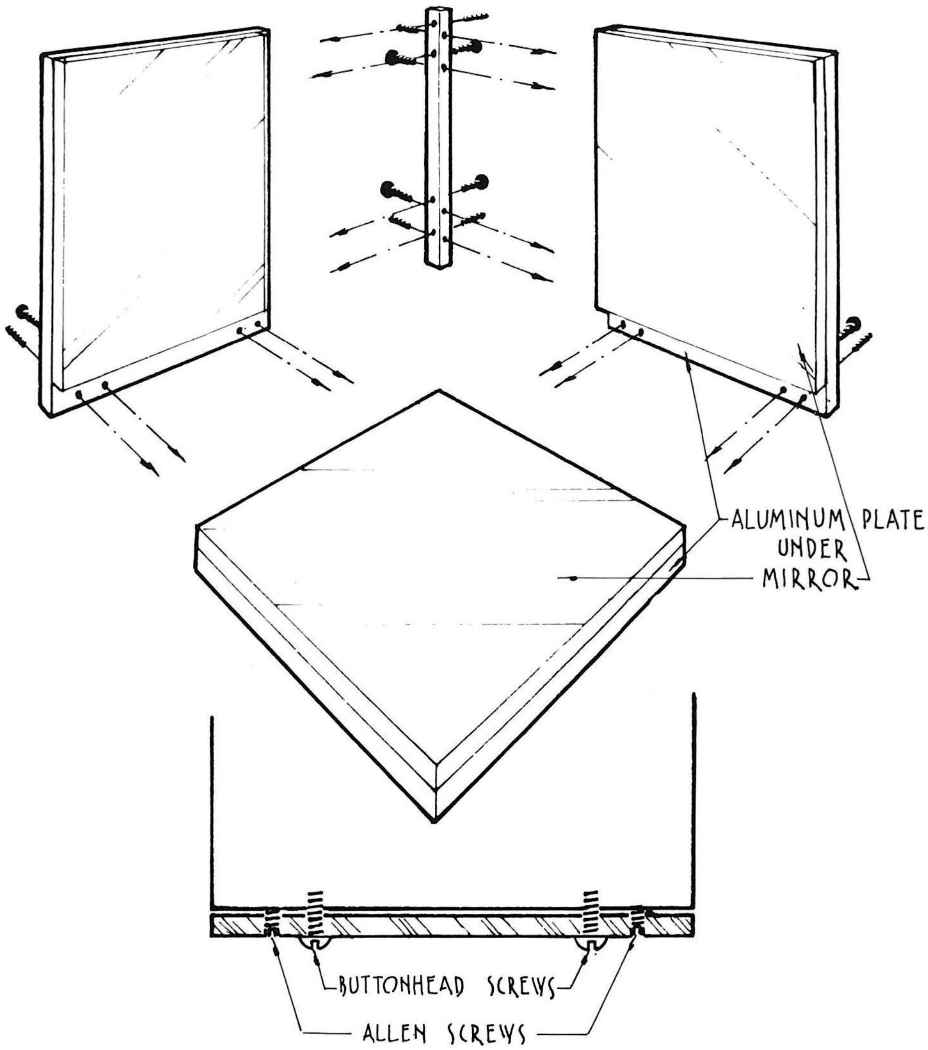

in which we put an allen screw that bears on the plate under it. This provides us with a fine adjustment capability by leaving the button head screws relatively loose and adjusting the allen screws and then tightening the button heads down. The mirrors are mounted to the aluminum with silicone sealant. To replace mirrors, use a fine wire to slit the rubber seal, or apply gasoline to break the bond.

The *Corner Reflector* and the *Shadow Kaleidoscope* (Cookbook 1, recipe 20) are both mounted to the same table. The table top under the *Corner Reflector* is a second surface mirror. The graphics (see below) describe the difference between first and second surface mirrors and ask people to help us by not touching the first surface variety.

The lighting on the exhibit should be directed on the person using it, not on the mirrors. That is, visitors should see themselves in the mirrors, and not the scratches and dirt on them. (But don't forget to light the exhibit graphics.)

Critique and Speculation

Although the graphics instruct visitors not to touch the first surface mirrors, some people handle them anyway. This necessitates either putting up with dirty, chipped mirrors or replacing them as necessary—maybe once every two years, depending on use.

Related Exploratorium Exhibits

Reflection Plane

Duck Into Kaleidoscope; Everyone is You and Me; Look Into Infinity; Primary of a Cube; Mirrorly a Window; Shadow Kaleidoscope; Porro Prism; Rear View.

Image Formation

Shake Hands with Yourself; Touch the Spring; Parabolas; Christmas Tree Balls; Hot Spot; Image Mosaic; Retroreflective Lens.

Symmetry

Door is a Lensless Camera; Bathroom Window Optics; Steinberg.

Binocular Fusion/Stereovision

Cardboard Tube Syllabus; Eye Rivalry 1 & 2; Lightweight Phantoms; Moon Rocks; Professor Pulfrich's Universe; Random Dot Stereograms; Stereo Paintings; Stereo Rule; Two as One; Stereo Viewers Old & New; Three-D Dots; Three-D Shadows; Cross Eye/Wall Eye; Wide Eyes; Snow Patterns.

Corner Reflector

This reflector has you cornered: it always sends light back in the direction from which it came.

To do and notice

Shut one eye. Stare at the corner where the three mirrors join. Move your head, and notice that the pupil of your open eye always falls at the corner no matter where you move.

Open both eyes. The corner will appear closer to whichever of your eyes is the stronger, or more dominant.

Notice that your image is upside down. It's also reversed from the normal mirror image. That's because you are seeing the reflection of a reflection of a reflection.

What's going on

This reflector bounces light from mirror to mirror until the light reflects back parallel to the direction from which it came. If you were to shine a thin beam of laser light at the outside edge of one of the mirrors, it would bounce around until it reflected away parallel to the original beam but moved over a bit. The closer you shine the light to the corner where the mirrors meet, the closer the reflected beam will be to the original beam.

If you are to see your own eye in the mirror, your eye must intercept the reflected beam. But the only beams that your eye is in a position to intercept are the ones that bounce off the mirror right near the corner—those are the only beams returning close to their original path. Since those are the only beams you see, your eye always appears to be in the corner, no matter where you move.

So what

Corner reflectors come in handy whenever you want to reflect light directly back to its source. Reflectors on cars, bicycles, and highway markers are often made of many little corner reflectors. When a car's headlights hit these reflectors, the light reflects back to the driver.

The mirror flat on the table top is a back-surface mirror, like those in your home.

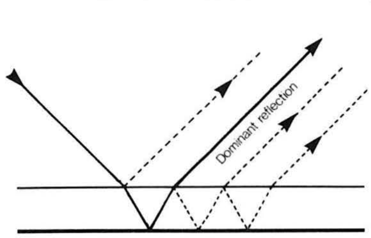

Back-surface mirror

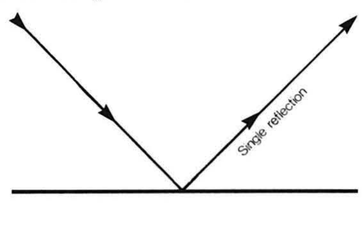

Front-surface mirror

Look carefully into the table top mirror and you will see more than one image of the key. If you look across the surface of the mirror (you will probably have to bend down), you can see the images even better -- and you will also begin to see more images as the reflections of reflections add up with kaleidoscopic results. The dominant image is reflected by the metal on the back of the glass. The fainter images are reflected by the front surface of the glass.

The Corner Reflector mirrors and the Shadow Kaleidoscope mirrors are front-surface mirrors. Front-surface mirrors create only one image because the metal is in front of the glass. This kind of mirror is easily damaged.

Everyone Is You & Me

Description

Light coming from a real object cannot be distinguished from light coming from an image. Two people sit on opposite sides of a "one-way" mirror. This mirror reflects ⅓ of the light, lets ⅓ through to the other side, and absorbs the other ⅓. By adjusting the illumination on themselves, the people are able to combine their faces into a single hybrid image with features from both of them. If each person presses a button, only one half of each is lit and you see a "split personality."

Construction

This exhibit is straightforward in construction. The mirror is chrome plated glass available from:

Keim Precision Mirrors Corp.
124 E. Angeleno Ave.
Burbank, CA 91502
telephone: (213) 842-4543

Order K 32 32" 32% INC. Our mirror is 20" x 26" x 1/4" and the cost is around $100.00. The mirror is mounted 5¼ inches above the exhibit table allowing the electrical dimmer box to fit in between. This dimmer box is actually two normal outlet boxes, back to back, with cover plates. There is one dimmer for each side and one button for each side. The dimmers are standard household dimmers. The knobs on the dimmers have a mechanical stop built into them so that the lights are always on a little bit (this could be done electrically by modifying the dimmer). The button turns off one of the lamps on the button pusher's side. The lamps are wired so that when the button is pressed, that person's right side lamp goes out. (If both press their buttons they should still see a whole face in the mirror, half and half.) Lighting is mounted above the mirror. Two fixtures are required for each side. Our lamps are 75 watt floodlamps, though you may have to switch to 150 watt lamps if your exhibit is in a lighter area. If you do switch to higher wattage lamps, make sure that your dimmers can handle the extra load and that the lamps do not become too hot. The lamp wiring runs up a dado groove in the mirror frame to

the lighting fixtures. We use a fixture designed for outdoor lighting, with a bulb guard. This guard protects the bulb if the fixture is bumped, and also keeps people from burning themselves. Our exhibit is free standing with separate stools, which are easily pushed aside for wheelchair access.

Critique and Speculation

We discovered after some years that the views from each side were not the same. This asymmetry arises from the fact that the light reflects more efficiently from the air-chrome surface than from the glass-chrome surface. We are currently investigating a possible solution—mounting two less reflective 1/8 inch thick mirrors together, chrome to chrome.

Related Exploratorium Exhibits

Reflection Plane

Corner Reflector; Duck Into Kaleidoscope; Look Into Infinity; Primary of a Cube; Mirrorly a Window; Shadow Kaleidoscope; Porro Prism; Rear View.

Image Formation

Shake Hands With Yourself; Touch the Spring; Parabolas; Christmas Tree Balls; Hot Spot; Image Mosaic; Retroreflective Lens.

Symmetry

Door is a Lensless Camera; Bathroom Window Optics; Steinberg.

Exploratorium Exhibit Graphics

Everyone is You and Me

This glass is both a mirror and a window.

To do and notice

○ Have a friend sit on the other side.

○ Carefully line up your eyes or your noses. Be sure that you are both the same distance from the mirror.

○ Turn the knob to adjust the light. Watch your reflection change.

○ For another effect, you and your friend can turn your lights to bright, then hold the black buttons in.

What's going on

There is a very thin deposit of chromium on the glass. This layer of metal reflects some light, but lets an equal amount of light pass through. When your side of the glass is bright, the reflected image of your own face will be brightest and most visible. When the other side of the glass is bright, the transmitted image of your friend's face will be brightest and most visible.

Interference

Like water waves, light waves can affect each other when they meet. Sometimes this meeting can result in the energy of two waves adding together to form a big wave with more energy. Sometimes the waves can meet and actually cancel each other out. This wave interaction, called interference, can create some very beautiful effects, as the exhibits in this section demonstrate. The twinkling spokes of light that fan out around a street lamp, the shimmering bands of color in oil slicks, soap bubbles and opals, the patterns of shading at the edge of a shadow—all are produced as light waves move in or out of phase with each other.

Interference Exhibits in Cookbooks I, II, and III:

Soap Film Painting

Description

Visitors hoist a bar out of a soap solution reservoir along guide wires, creating a large (5 feet square) soap film. Beautiful interference colors are observed as the film flows and thins out, eventually turning black due to destructive interference between the film's front and back surfaces. Blowing on the bubble sheet can set up attractive flow patterns or distort the film into interesting reflective shapes, while shaking the frame of the exhibit can excite various resonant standing waves.

Construction

This is a large exhibit and must be displayed somewhere near a bright white wall for the beautiful colors to be seen. Visitors stand with their backs to the wall and observe the wall's reflection in the bubble. We've hung a black curtain on the other side of the bubble to lessen any background distractions. It is also important that the bubble area be free of drafts. Our exhibit consists of a large frame which supports the guide wires and pulley mechanism for the long horizontal PVC pipe that lifts the film; the frame also holds the bubble solution tray.

The tray was crafted from all-weather plywood and then carefully painted with epoxy paint. This paint is waterproof and very durable. The joints are sealed with silicone seal caulk. A hinged lid covers the solution when not in use and opens to form a splash guard. Another version of this tray was made to order from stainless steel with removable covers. Both versions have drains built into them.

The pulley mechanism was developed to slow down the PVC bar on its descent into the solution. This prevents the bar from splashing soap solution everywhere, but doesn't slow the bar so much as to be annoying. To accomplish this the machined nylon pulley is curved thinner in the middle so that the nylon cord bunches there and binds just the right amount. The pulley also has a spring-loaded friction clutch to slow it down (see diagram).

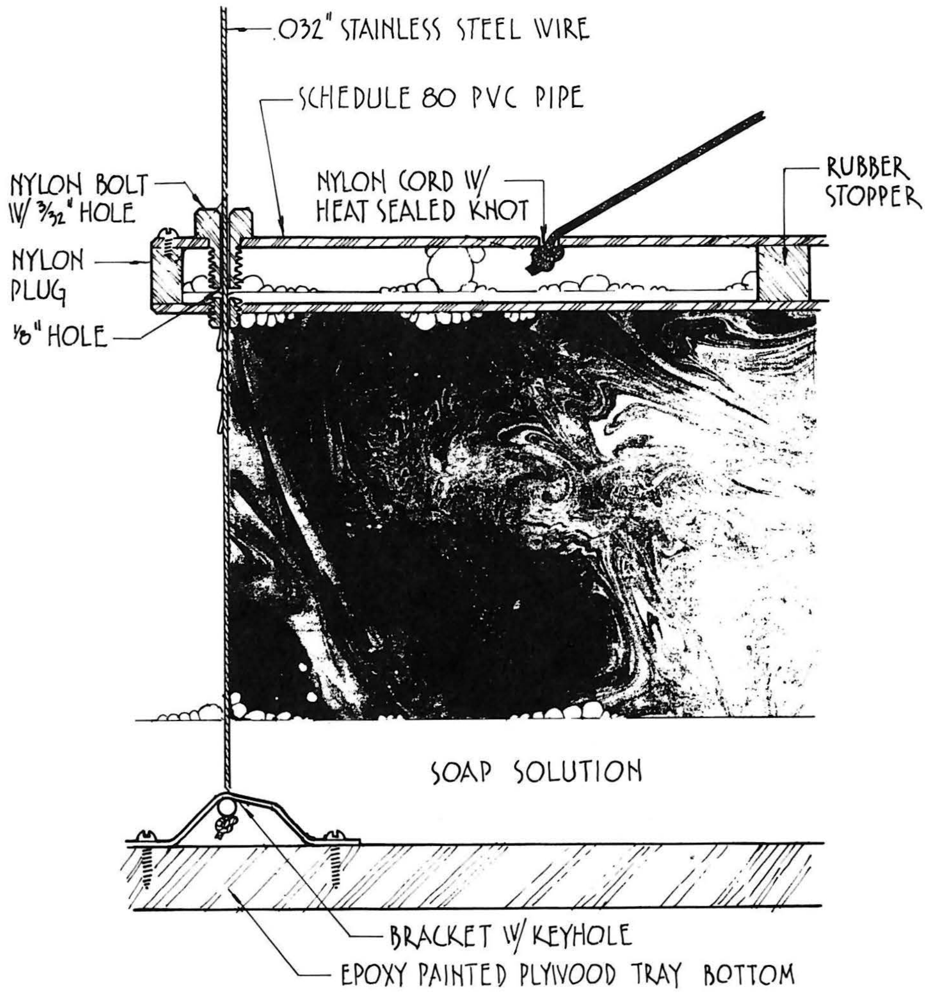

The guide wires are .032" stainless steel wire. To keep people from pulling and breaking these wires a 3" stainless steel spring is inserted at the top of the frame, allowing the wire a little "give". To attach the wire to the spring, the end is looped (with a nico-press crimp sleeve) and hooked over the end of the spring. The bottom of the wire is tied to a short stainless steel rod (or ball) which then slips into a keyhole in a bracket, that is screwed (welded in the stainless steel model) to the tray. The wires pass through the PVC bar in bushings made from a nylon bolt drilled with a 3/32" hole down its length and threaded into and across the bar (see diagram).

The PVC bar is schedule 80 PVC pipe with an outside diameter of about 7/8". Ours is about 62" long with about 60" between the guide wires. If the guide wires are dry the bubble will pop or not form at all, so the bar is modified to also act as a small reservoir of soap solution, which it continuously spills down the wire. To accomplish this we shoved rubber stoppers into the PVC pipe to a depth of about 8"—without these stoppers the liquid tends to run to and weigh down one end of the pipe. The ends are sealed with machined nylon plugs (you could use another set of rubber stoppers). Each wire guide (nylon bolt) has a 1/8" hole drilled in it to allow solution to flow out along the wire and keep it wet (see diagram). The nylon suspension cords are held in the PVC bar with heat sealed knots (you can also seal a knot with "Krazy Glue").

Our formula for soap solution is:

2/3 cup Dawn dishwashing soap
3 tablespoons glycerine
1 gallon water

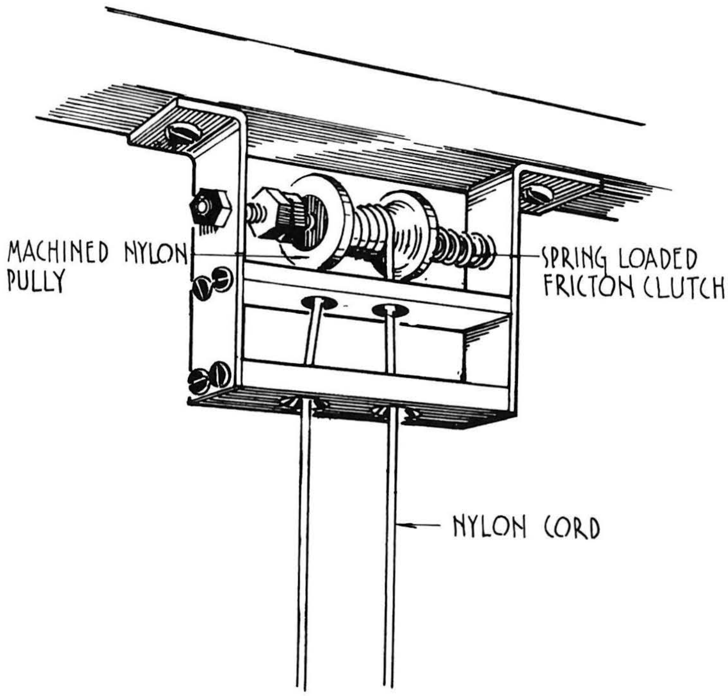

We gently stir the solution and let it stand for a couple of days, which seems to improve its quality. The soap tray is filled to a depth of about 2''—just enough to cover the bar (you get more splashing with more solution). This solution will make bubbles that last for several minutes (if you can keep the kids from popping them).

Critique and Speculation

This is a moderately high-maintenance exhibit. The quality of the soap solution must be monitored as water evaporates. We simply keep adding water to the solution, but eventually we have to dump it and start fresh.

Our asphalt floor is perfect for this exhibit for a couple reasons. It is non-slip, and it doesn't matter when we spill solution and mess it up. A slick floor would be a serious hazard around this exhibit.

If Dawn dishwashing soap is not available in your area, try another brand of clear, not cloudy, dishwashing soap and experiment—some work and some don't. If you come up with a better formula than ours, please let us know.

Exploratorium Exhibit Graphics

Soap Film Painting

Some bubbles and films, despite their somewhat frivolous reputation, are educational as well as beautiful. With this film, you can observe the colors created by the interference of reflected light waves and the wave patterns that form in a vibrating membrane.

To do and notice:

Pull the cord and raise the bar out of the soapy water to make a soap film.

Notice the constantly changing colors on the film. Light waves reflecting from the film make the colors you see.

Shake the frame back and forth repeatedly. Notice the pattern of waves on the film.

Stand a few feet away from the film and blow on it gently. The film stretches when you blow and returns to its original shape when you stop. Soap films try to make the shape that has the smallest possible surface area. This is why soap bubbles are usually spherical.

Related Exploratorium Exhibits

Interference

Bridge Light; Coated Optics; Dichroic Clock; Diffraction; Diffraction Images; Distilled Light; Hologram; Laser; Leyes Photos.

Color

Bridge Light; Dichroic Clock; Model of Color TV; Prism Tree; Selective Color Focusing; Soap Bubbles; Spectra.

Surface Tension

Visible Effects of the Invisible; Strobe Fountain; Bubble Hoops; Long Path Diffraction; Multiple Raccoon Eyes; Points of Light; Soap Bubbles; Water Waves; Wave Upon Wave; Feather Light; Interference Model; Michelson Interferometer; Walking Beats; Watch Dog.

Polarization

Like refraction and interference, polarization can create some spectacular light effects. Light waves normally vibrate up and down, side to side, and all directions in-between as they move from one place to another. But a polaroid filter is made up of molecules that transmit light waves vibrating in only a single plane—side to side, for example—and such polarized light has some unusual qualities and practical applications. In *Polaroid Island* you can see how polarization brings out the colors of light by sorting them according to wavelength. If red light waves are vibrating horizontally, for example, and blue waves are vibrating vertically, a polaroid filter that transmits only the horizontal vibrations will only let the red light through. This type of sorting can be used to see the results of passing light through sugar crystals, clear plastics with internal stress patterns, or even cellophane tape. You can also see that some reflections can be turned on and off through the turn of a polaroid filter, depending on the angle of the reflected light.

Polarization Exhibits in Cookbooks I, II, and III:

Recipe No. 173

Polaroid® Island

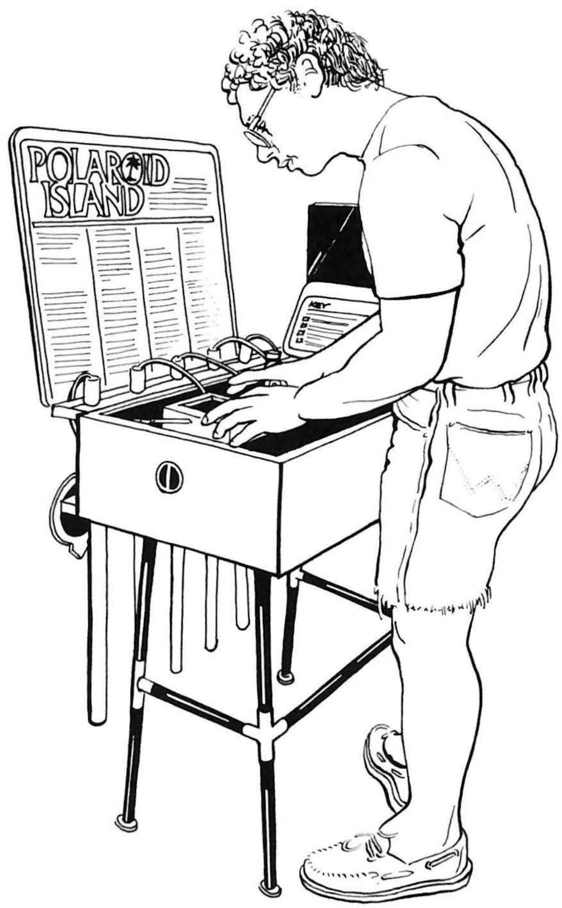

Description

An assortment of props is made available to explore various polarization effects (see graphics), with a large light box for illumination.

Construction

The main component here is a side-ventilated light box (18x30'', 8'' deep) with a diffused 1/4'' thick white plexiglas top. Three F20T12-CW fluorescent bulbs placed well below the diffuser provide the illumination. Two thirds of the 30'' wide table-top is covered with a large piece of polaroid material that's protected with 1/8'' plexiglas. Polaroid material is available from:

Polaroid Corporation
Technical Polarizer Division
20 Ames Street
Cambridge, MA 02139
telephone: (617) 769-6800 X4505

Ten items (enough to keep a curious person busy for hours) are available

to play with. They are:

1) Polaroid filters—We provide 6'' diameter filters sandwiched between two PVC rings for protection (without the rings, the filters get scratched).Ours happen to be 1/8'' thick plastic filters; you can sandwich thin polarizer between plexiglas disks and then sandwich the sandwich between the rings. We have not found a satisfactory way to label the direction of polarization—engraving it into the protective ring makes it hard to see in the dark.

2) Clear cellophane tape on a 1/4'' thick glass plate—our plate measures about 4'' by 5''. Single and multiple layers should be provided—you could even get artsy on one piece of the plate and make some ''tape paintings.'' You will have to experiment to find the right brand of cellophane tape (some work better than others). DO NOT use the frosted ''Magic Transparent'' tape—it doesn't work at all.

3) A small bottle of ''Karo'' type syrup—We use a small square medicine-type bottle about 1-1/2'' square and 3'' tall, though a clear round bottle would work better. (If you can find or make a wedge-shaped container that would be even better.)

The next three items (#4,5, and 6) are delicate and are housed in a square wood-framed box with clear plexiglas top and bottom. The plexiglas should be recessed to prevent scratching. We've fixed the objects to the bottom of the box with small dabs of silicone rubber sealant:

4) Calcite crystal—Iceland spar variety. Find a large clear crystal if possible—contact your local lapidary shop for sources. This crystal nicely demonstrates birefringence.

5) Plastic pillbox—demonstrates stress left over from its casting.

6) Mica crystals—Again, contact your local lapidary shop or rockhounds. We use a few large flakes of varying thickness.

7) A piece of black plexiglas is mounted above the right side of the table so that polarization by reflection can be observed.

8) A 3'' square of typing paper is placed on top of the polaroid material under the plexiglas protective sheet. This paper transmits the light, but depolarizes it. A ''+'' is marked on the paper for use with the birefringent calcite crystal.

9) ¼ wave plate—A 6'' diameter ¼ wave plate (mounted the same as the polaroid filters) is available for experimentation with circular polarized light.

10) Vinyl tubing—Simple aquarium vinyl tubing will change color when stretched between two crossed polaroids. This tubing is available from your local aquarium supply shop.

You could also provide pieces of plexiglas to stress (and observe the lines of stress through polarized filters), but we didn't since we have another exhibit that shows this phenomenon (*Bone Stress*).

All of the above items, with the exception of the glass plate with cellophane tape, are tied to the exhibit with vinyl covered steel cable, which in turn attaches to weights in tubes; this way the cables retract when not in use and are less likely to get tangled with each other.

Provide plenty of room for graphics—you'll need it.

Related Exploratorium Exhibits

Polarization
Polarized Radio Waves; Polaroid Projector; Polaroid Sunglasses; Rotating Light; Blue Sky; Pinball Machine; Two Wheels and a Ball; Visible Magnetic Domains; Magnetic Light Sorter; Reflection Blocker; Moon Rocks; Critical Angle; String Analogy; Glass Bead Rainbow.

Polarization, Circular
Bone Stress; Guitar String; Glass Catfish; Relative Motion Pendulums.

Colors, Complementary
Aurora; Blue Sky; Color Reversal; Colored Shadows; Color Removal; Distilled Light; Benham's Disc; Color Sum; Bird in the Cage.

POLAROID ISLAND

You can think of light as a traveling wave or vibration. Like a wave traveling along a horizontal rope, the vibration can be up and down and side to side. Ordinary light is unpolarized; it includes light waves vibrating in all directions. In polarized light, all the light waves are vibrating in one direction.

At this exhibit, you can play with polaroid filters and clear materials that affect polarized light. To learn more about the effects you see here, visit the other exhibits in this area.

To do and notice:

● Place a polaroid filter (1) on the polaroid-covered part of the light table. Turn the filter and notice that it sometimes looks dark and sometimes looks light.

What is going on:

A polaroid filter lets through light waves vibrating in one direction and absorbs light waves vibrating in other directions. The arrows on the polaroid filter and on the table indicate what direction that the light waves passing through the polaroid are vibrating. When the arrows on the filter and the table are lined up, both pieces of polaroid let through light waves with the same direction of vibration, and the filter looks bright. When the red arrow on the table and the arrow on the filter are crossed, one polaroid blocks all the light that could pass through the other and the filter looks dark.

Try putting a third polaroid filter between the crossed polaroids, with its arrow oriented at a diagonal relative to the other filters. The filter will no longer look dark. Why? You can think of the light wave as a vibrating rope passing through a picket fence: the rope moves up and down, but not back and forth. If you passed this vertically vibrating rope through a horizontal slot, none of the up and down movement would be transmitted: the rope would bump into the top and bottom of the slot and stop vibrating. However, if you put a diagonal slot between the picket fence and the horizontal slot, some of the vertical vibrations would be transmitted through the diagonal slot. The diagonally vibrating rope has some horizontal vibration, so some vibration would be transmitted through the horizontal slot.

To do and notice:

● Put the glass plate with strips of clear tape (2) and the bottle filled with sugar solution (3) on the polaroid-covered part of the light table and look through the polaroid filter (1). Turning the filter affects the way these clear materials look. Try this on the part of the light table that is not covered with polaroid material. You see colors only when the tape or the sugar solution is sandwiched between two pieces of polaroid material.

What is going on:

COLORS IN CLEAR MATERIALS

The wavelength of the light, the distance from one wave crest to the next, determines the light's color. Blue light has a short wavelength, for instance. Red light has a longer wavelength. White light is made up of many different wavelengths and many different colors. A prism or a raindrop makes a rainbow by spreading out light according to its wavelength, thus sorting out the different colors.

Ordinary white light is unpolarized -- the light waves are vibrating in all different directions. In polarized white light, the light waves are all vibrating in the same direction. When polarized light passes through cellophane tape or sugar solution, the direction of the light's vibration changes. How much the direction of vibration changes depends on the wavelength of the light. Blue light, for example, changes its direction of vibration more than red. As a result, when the light emerges from clear material, all the colors are no longer vibrating in the same direction. When you look through the polaroid filter, you block some of the colors and let others pass through. (For more information on how cellophane tape and sugar solution twist the direction of light's vibration, see POLAROID PROJECTOR and ROTATING LIGHT.)

To do and notice:

● Place the wooden box that contains the calcite crystal on the table and look through the calcite crystal (4) at one of the crosses marked on tracing paper (8). Turn the box until you see two crosses when you look through the crystal. Put a polaroid filter on top of the box and turn the filter until you see only one cross. Keep turning the filter until you see the other cross.

What is going on:

CALCITE CRYSTAL

Calcite crystal bends horizontally polarized light and vertically polarized light differently. When you look through the calcite crystal at the cross on the piece of paper, you see two crosses: one carried by horizontally polarized light and one by vertically polarized light. With a polaroid filter, you can cut out either horizontally or vertically polarized light and make one of the crosses vanish.

To do and notice:

● Put a polaroid filter (1) on the white part of the light table where there is no polaroid material. Turn the filter until the arrow points to the right. Look at the reflection of the filter in the black plastic reflector (9).

What is going on:

The plastic surface polarizes light by reflecting the light waves vibrating in one direction. The combination of the reflecting surface and the polaroid filter cuts out most of the light.

Light and Color

Each element in the universe—each type of atom and molecule—creates, reflects, or absorbs its own special colors of light. Exhibits in this section show how colors of light are created in fluorescent tubes or iron sparks. In *Spectra*, you can see that each glowing gas has its own spectrum of colors. In *Color Removal* you can filter out some of the colors of light, while in the *Light Island* and *Colored Shadows* exhibits you can mix light colors to make new ones. In addition, with *Inverse Square* you can measure the rate at which light spreads out as it travels from its source.

Light and Color Exhibits in Cookbooks I, II, and III:

Color Removal

Description

A beam of white light passes through a prism, which separates the colors and projects the resulting spectrum on a screen. The visitor can place transparent colored filters in the white light beam and watch the spectrum to find out which colors are absorbed by the filters. Also, a small portion of the white light misses the prism and is projected on a separate screen, so the visitor can compare the effects of the filters on white and separated light.

Construction

This fairly simple exhibit consists of a light source, a projection lens, the prism, and the projection screens. Our light source is a 250 watt 120 volt ENH projector lamp, a good choice for this exhibit because of its brightness and built-in reflector. The lamp is housed in a folded stainless steel sheet metal enclosure with an open wire screen back. Since the lamp gets quite hot, we've placed a high-speed muffin fan to one side of it for ventilation. The other side and top of the lamp are shielded with an angled piece of stainless, which prevents a lot of the heat from radiating to the outer enclosure. A small slit, 3/4'' high and 1/32'' wide, has been cut into the enclosure directly in front of the lamp.

An image of the slit is projected on both screens by a small lens (1-1/4'' diameter with a focal length of about 3''). This lens is mounted (glued with epoxy) into a hole cut in aluminum ''L'' angle stock and screwed down at the appropriate distance in front of the slit to form the screen images.

The prism is epoxied to a triangular 1/2'' thick aluminum base. Our base allows the visitor to rotate the prism and has detents that give a tactile ''click'' when the prism is in optimal alignment. The prism has faces 40mm square and is made of SF 10 heavy flint glass. These are available from:

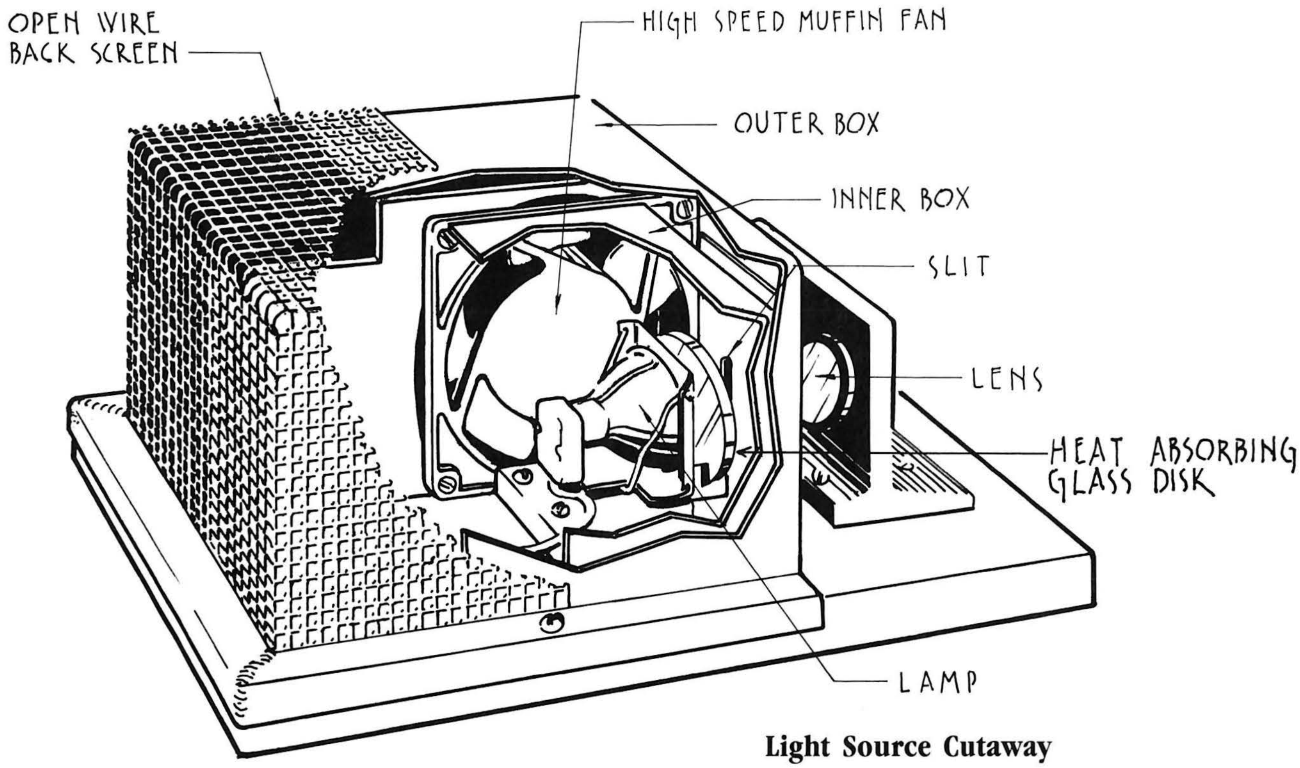

Light Source Cutaway

Karl Lambrecht Corporation
4204 N. Lincoln Avenue
Chicago, Illinois 60618
telephone: (312) 472-5442
order cat. no. 33 6675

or:

Klinger Scientific Corp.
83-45 Parsons Blvd.
Jamaica, New York 11432
telephone: (212) 657-0335
order cat. no. 33 6675 (same as above!)

The prism is mounted about 11'' in front of the lens and situated such that most of the white light passes through it, with a little light slipping by one side. The two screens are mounted 18'' from the prism and situated so that one catches the spectrum from the prism and the other gets the white light that slips by. The screens are tilted back 30 degrees from the vertical for better visibility.

We screwed to the table a small block of wood shaped like our filters; it indicates where the filters are to be placed in the optical path. The filters are of a few different types: colored plexiglas; theatrical gels and acetates sandwiched between clear plexiglas; and a glass dichroic filter in a plexiglas sandwich. They all have hardwood handles, which remind people that they are not expendable. Although we've found that the filters do wander around the museum to other exhibits, we have not found it necessary to tie them down. They are stored in slots at the front of the exhibit, so that the colored material sticks out underneath the front edge of the table; a rear-lit strip of white plexiglas, placed behind the filters under the table, lets people see what colors they are selecting.

Critique and Speculation

The prism in our exhibit is the object of quite a lot of abuse and has gotten badly chipped on the corners. Because it's right out there in the open, kids try to take it, and this seems to be the cause of most of the damage. A better housing—one that would protect the prism and yet not hide it—could probably be designed. The filters should be replaced when necessary, as scratches in them tend to diffuse the light instead of transmitting it straight along the optical path.

Related Exploratorium Exhibits

Color Separation
Holier than Thou; Blue Sky; Benham's Disc; Bird in Cage; Hot Light; Low Frequency Light; Patterns of Scattered Light; Pinball Machine; Rainbow Edges in Your Eye; Rainbow Edges in a Lens; Bubbles; Soap Film Painting; Color Sum; Color Temperatures; Glow Wheel; Polaroid Projector; Rotating Light.

Color Mixing
Aurora; Color TV & Magnetism; Colored Shadows; Lumen Illusion; Distilled Light.

Refraction
Disappearing Glass Rods; Bathroom Window Optics; Critical Angle; Leyes Photos; Conversation Piece; Glass Bead Rainbow; Multiple Lens Box; Water Sphere Lens; Water Waves; Image Relay; C the Light; String Analogy; Sun Painting; Convection Currents; Image Quality; Laser Demonstration; Air Reed; Rotating Light; Prism Tree.

Color
Bridge Light; Electromagnetic Spectrum; Iron Sparks; Recollections; Argon Candle; Solar Signature; Another Way of Seeing.

Colors, Complementary
Aurora; Blue Sky; Color Reversal; Colored Shadows; Distilled Light; Benham's Disc; Color Sum; Bird in Cage.

Exploratorium Exhibit Graphics

Color Removal

White light is a mixture of all the colors of the rainbow. Most colors are made up of some mixture of rainbow colors.

To do and notice

Remove any filters from the path of the white light and turn the prism until it lines up with its triangular base. Notice the rainbow colors on the back screen. The prism spreads out the colors that make up white light.

Notice that the white light that misses the prism shines on the front screen.

Place a colored filter between the light source and the prism. Compare the colors that are left in the rainbow to the color shining on the front screen.

Look through the same filter at the screens. Notice that the colors that you see don't change.

What's going on

White light contains all the colors of the rainbow. Each filter blocks or partially blocks some of these colors. The prism spreads out the remaining colors, letting you see only the rainbow colors that pass through the filter. The color on the front screen shows you what these colors look like when they are mixed together.

The colors that you see will be the same whether you put the filter between the prism and the light source, between the prism and the screen, or between the screen and your eyes. Changing the position of the filter doesn't change the color of the light that reaches your eyes, and that's what determines what you see.

The colored filters on the table contain organic dyes that absorb certain colors of light and allow other colors to pass through. An interference filter, on the other hand, absorbs little or no light—it reflects certain colors and lets others pass through.

Inverse Square Law

Description

Any point light source spreads out like an expanding sphere. In this exhibit a point light source shines through a perforated metal screen, projecting an array of dots—in evenly spaced rows—onto a movable white screen. The farther the white screen is moved from the light source, the wider spaced the dots become. A small square has been drawn on the movable screen, and the visitor can count the number of dots enclosed by this square at a given distance from the light source. If the distance is doubled, for example, the number of dots within the square is reduced to ¼ of its previous value. If the distance is tripled, the number of dots drops to 1/9 the original number. In general, the light drops by the inverse of the square of the increase of distance. If the exhibit had a light meter, the light intensity would be seen to drop by the same value, as the light spreads out to cover a larger area. Anything that seems to radiate uniformly from a point acts in this manner: gravity, electrical and magnetic forces, and sound are all examples.

Construction

This exhibit has few components: the light source, a distance scale, a screen, a darkened exhibit enclosure, and a lighted calculator.

Our light source is built from an 8" diameter stainless steel sphere. Since we bought our sphere surplus, we can't give you a sphere supplier. But you may substitute anything on hand (like a plastic sphere from your local plastics merchant), and can even replace the sphere with a rectangular box, although a sphere helps make the point that the light is spreading out in spherical wavefronts. We milled a square hole in the sphere and soft soldered (you could use epoxy) a piece of perforated metal screen in front of the hole; after soldering, you can easily drill out any holes that were filled with solder. Our screen has an array of 16 by 16 holes (256 holes total). The holes are about .0225" in diameter and spaced about .045" apart, making the square array .72" by .72". In the center of the sphere is a small GE787 quartz halogen lamp and socket mounted on a hollow stainless steel post. The post passes through a short, drilled bolt and is held in place with two spring-loaded detents (see the cut-away diagram for details); it can thus be easily rotated and adjusted up and down to achieve the desired positioning and size of the projected points. This whole assembly is easily dropped out of the sphere by unscrewing the bolt. Well insulated wires pass through the hollow tube to power the lamp.

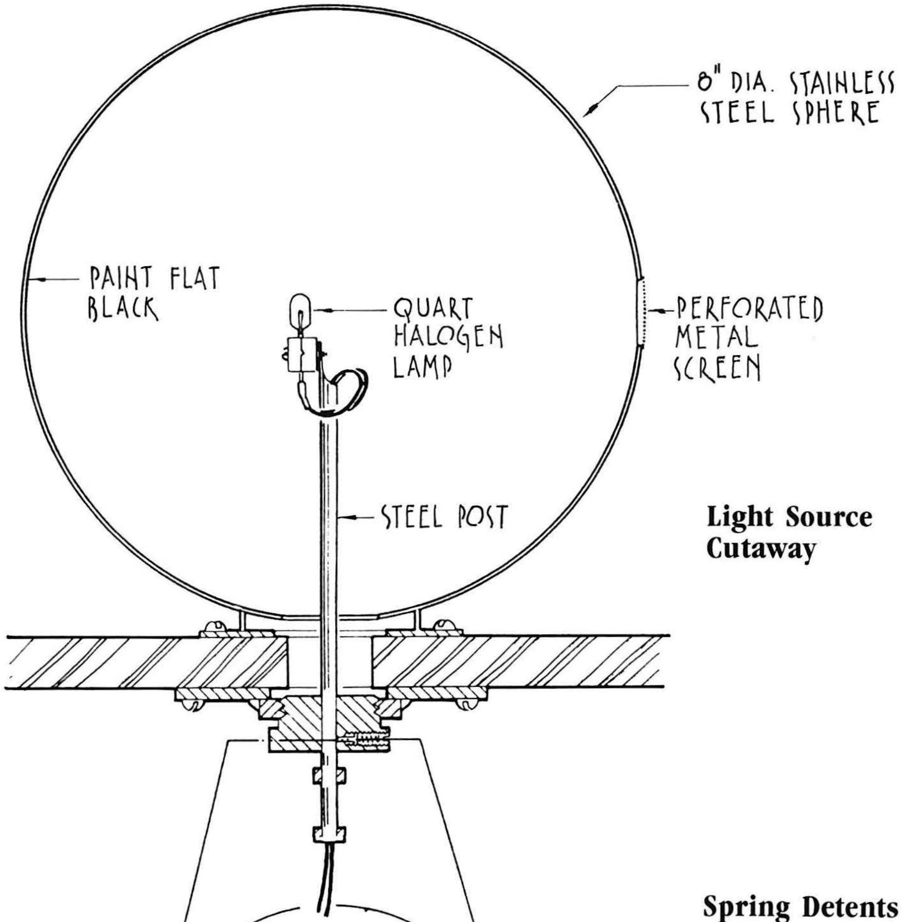

Light Source Cutaway

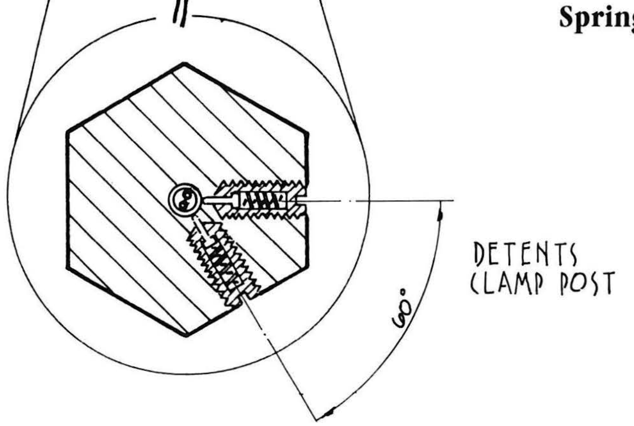

Spring Detents

The power supply is screwed to the bottom of the table near the lamp holder assembly, and both are covered with a lockable box. The inside of the sphere is painted black to reduce unwanted reflections.

A distance scale is fixed along the front edge of the table top and covered with 1/8'' plexiglas. The ''0'' of this scale is positioned at the lamp (at the center of the sphere), and the ''1'', ''2'', etc., marks are placed at 8'' intervals. This spacing isn't critical, but be sure that the marks are close enough together to give the visitor several of them to play with, yet not so close as to make the numbers unwieldy. Our scale is numbered from 0 to 6 (48'' long).

The movable screen is 14'' by 14''. It is mounted on a hardwood base measuring 14'' by 2'' wide. The screen is made from a piece of 1/4'' masonite with flat white formica glued to both sides (for the visitor's convenience); the small square is engraved into it, also on both sides. The size of this square is such that when the screen is placed at the ''1'' mark, all 256 dots are contained within it. Be careful to align the dots within the square (screen at position ''1'') each time you change the lamp. Each hole in the perforated screen produces a pinhole image of the filament, so be sure to align the lamp with the filament end-on to make dot-like images.

The exhibit enclosure must protect the exhibit from extraneous light, since the dots become dimmer as the screen is moved away from the source. We made our enclosure from 1'' square steel tubing which we welded into an open frame structure, from which we have hung thick opaque black cloth that shades the table on all sides except the front. The table top is covered with black automobile floor carpeting, and most graphics are done with white lettering on a black background.

A calculator is fixed to the table top at the opposite end from the light source. Our solar powered calculator is held to the table in a plexiglas frame, and is illuminated (and powered) by a light fixed to the steel frame above it. This light is actually the cut-off front end of a regular flashlight, which we power with a standard 3 volt battery eliminator (located under the exhibit table with the other power supplies). Visitors can use the calculator to divide the number of dots in the square by 256 and arrive at 1/4th, 1/9th, etc.

Critique and Speculation

If you lack welding facilities, a wooden frame, painted black, will work just as well.

The exhibit works best in a darkened area of the museum. If your area is brightly lit, you may have to use more elaborate shading. Make sure that the dots are easily visible on the screen no matter where the screen is placed on the table top.

Although this is not a glamorous or overwhelmingly popular exhibit, it is a marvelous teaching tool which ties together many diverse phenomena.

Related Exploratorium Exhibits

Light Gathering

How Many Stars?; Holier than Thou; Jewels; Pin Screen; Telescope; Christmas Tree Balls; Multiple Lens Box; Triple-Aye Light Stick; Image Relay; Image Quality; Giant Iris; Phototube; Another Way of Seeing.

Projection

Geochron; Perspective Window Camera; Points of View; Projection; Sophisticated Shadows; Circular Deformations; Convection Currents.

Size-Distance

Distorted Room; Size and Distance; Trapezoidal Window; Wide Eyes; Changing Squares; Cows; Three-D Shadows; After Image; Electric Fish; Eyeballs; Stereo Rule; Moire Patterns; Reverse Distance.

LIGHT

INVERSE square law

$\frac{1}{r^2}$

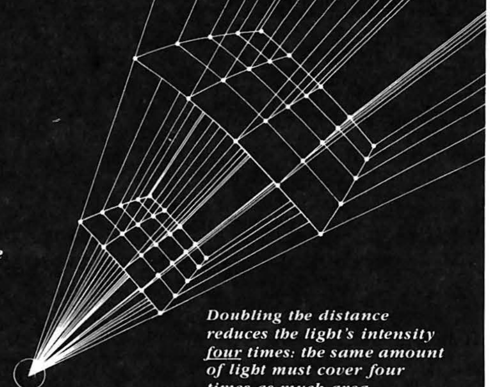

By moving the screen away from the lamp and counting the dots that fall in a certain area, you can measure how light intensity varies with distance from the lamp.

Doubling the distance reduces the light's intensity four times: the same amount of light must cover four times as much area.

To do and notice:

The round metallic lamp projects 256 dots of light. Place the white screen so that it faces the lamp and move the screen until all 256 dots just barely fit within the square marked on the screen. Notice that the screen is lined up with the ① on the scale near the front edge of the table.

The ⓪ on the scale lines up with the light bulb that makes the dots. The numbers on the scale are equal distances apart. Move the screen from ① to ②. Count the dots that fall within the square marked on the screen. (It's easiest to count the dots along each edge of the square and then multiply the two numbers together.) There should be about 64 dots. You have doubled the distance from the light source, but only a quarter as many dots fit in the square.

At position ②, the number of dots equals:

$$\frac{256}{(2)^2} = \frac{256}{4} = 64$$

Try putting the screen at other positions and counting the dots that fall within the square.

What is going on:

As you move the screen away from the lamp, the number of dots that fall within the square decreases according to a mathematical formula.

At position ③, the number of dots equals:

$$\frac{256}{(3)^2} = \frac{256}{9} = 28.44$$

At position ④, the number of dots equals:

$$\frac{256}{(4)^2} = \frac{256}{16} = 16$$

Doubling the distance reduces the light's intensity four times; tripling the distance reduces the intensity nine times; quadrupling the distance reduces the intensity sixteen times. The formula that describes the light's intensity at different distances from the lamp is:

$\frac{1}{r^2}$ where r is the distance from the light.

So what:

This formula, $1/r^2$, is called the inverse square law. It describes how the intensity of light drops off as you move away from this lamp, but it has much more general applications. This law applies to any situation where something spreads uniformly in all directions from a point.

Suppose, for example, you were painting a wall with a can of spray paint. You may know from experience that if you hold the can too close to the wall the paint will drip because there will be too much paint per square inch. If you move the can farther from the wall, less paint will reach each square inch of the wall. The amount of paint that reaches the wall is proportional to $1/r^2$, where r is the distance between the can and the surface. As you move away from an explosion, the force drops off at $1/r^2$, where r is the distance from the explosion. The pull of the Earth's gravity drops off at $1/r^2$, where r equals the distance from the center of the Earth. The attraction or repulsion between two electric charges decreases with the distance at $1/r^2$, where r is the distance.

Why does this formula apply to so many things? As you move away from the source, you are spreading the light (or the paint, the explosive force or whatever) over a greater area. You can think of the light as an expanding sphere around the source. When you are comparing the light that reaches an area one unit from the source with the amount that reaches an area two units from the source, you are essentially comparing the area of two spheres with different radii.

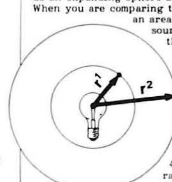

The formula for calculating the area of a sphere is $4\pi r^2$ where r is the radius. If you make a ratio of the area of two spheres and set one sphere as a standard against which to compare the other sphere, the constants cancel out and you are left with $1/r^2$.

Iron Sparks

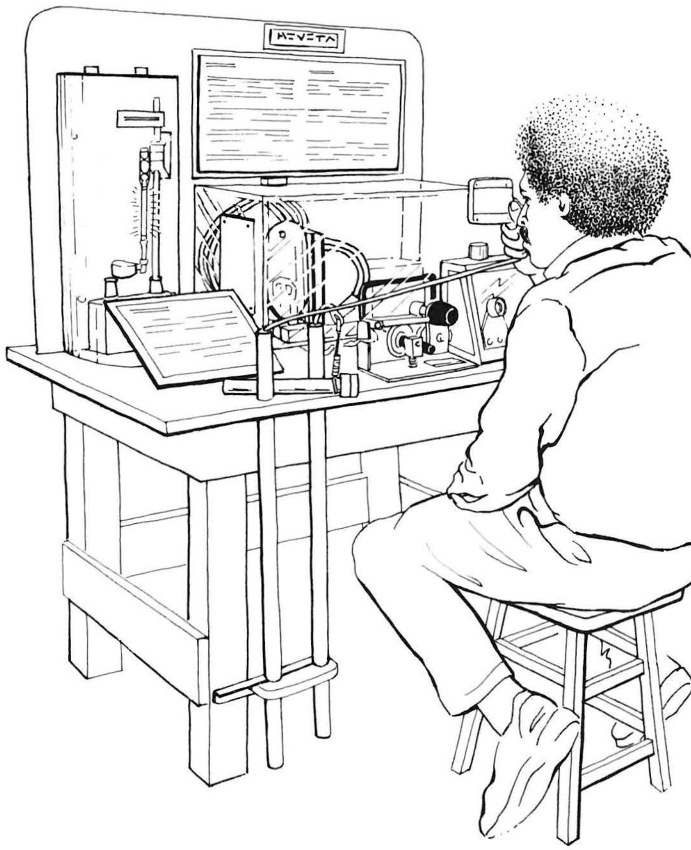

Description

The visitor first pushes a button to bring the exhibit to life, then turns a knob which feeds an iron rod into a slowly turning wire brush. The brush and rod are connected to opposite ends of a high current power supply, so that when they touch, blue-white sparks fly. If the light from the sparks is examined with a spectroscope attached to the exhibit, it is seen that the blue-white light is a combination of thousands of discrete spectral lines made by the complicated iron atom. By comparison, a simple element like helium gas produces a relatively simple spectrum. The visitor can view the spectrum of helium through the spectroscope or with a diffraction grating.

Construction

Iron Sparks isn't horribly difficult to build, but it will take some craft and time. Its main parts are the iron rod feeder, the wire wheel and its associated box, the power supply, and the helium tube and supply.

Probably the most difficult part of this exhibit is the iron rod feeder. The 1/2'' diameter iron rod rolls on top of two steel ball bearing pulleys (3'' diameter), and seats nicely in the ''U'' of these pulleys. A grooved aluminum roller attached to a plastic knob allows the visitor to drive the rod back and forth. To keep the rod firmly between all rollers, the rear pulley roller is spring loaded on an arm to push up on the rod, while a steel stop prevents the rod from being rolled backwards out of the feeder (see diagram). A braided copper grounding strap is screwed to the back of the rod to supply power.

The wire wheel is housed in an aluminum box with a hinged and lockable front door for access. The box is 9'' wide, and 8'' tall. The front of the box is sloped, so the box is 5'' deep at the bottom and 3'' deep at the top; a screened 1'' diameter hole in the back wall provides some ventilation. A 25 RPM motor is attached to the rear of the box, with its armature passing through the back wall. A grounding strap connects the box to the power supply on the back wall. Inside the box, a brush assembly fixed to the back wall makes contact with the wire brush through a bronze

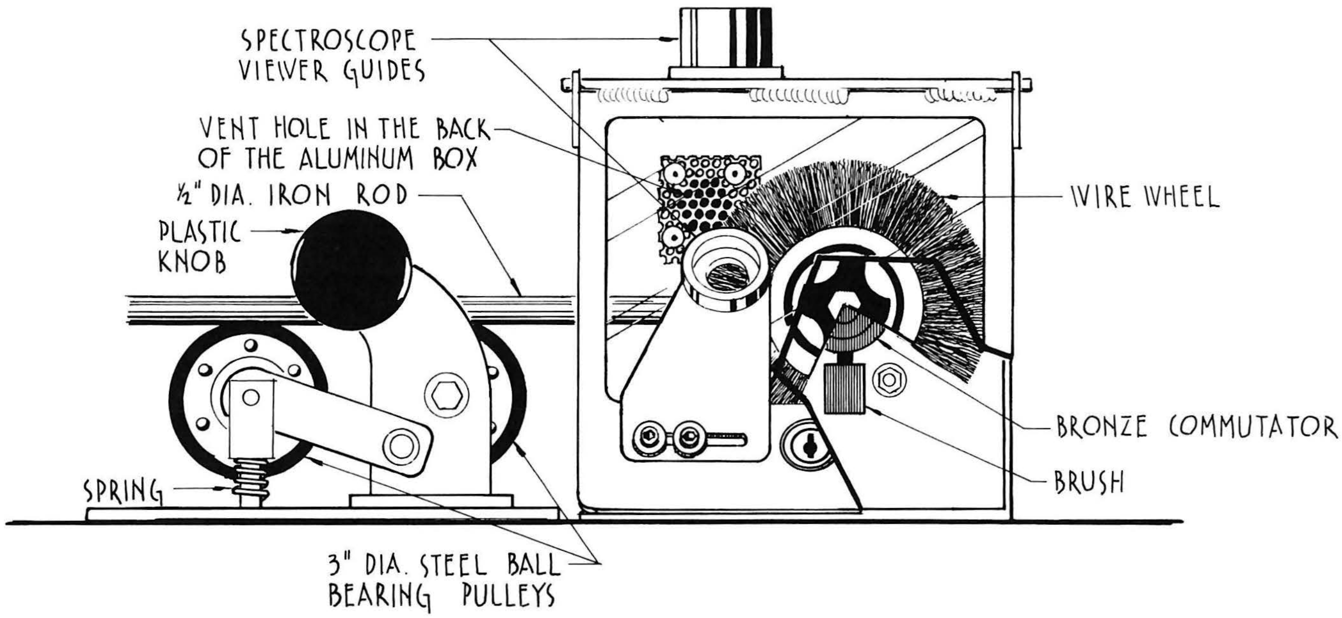

commutator, which is attached to the motor shaft behind the wire brush (see diagram of box). The motor must be weak enough to easily stall when the rod is pushed too far into the wire wheel—this way the wire wheel doesn't get all bent up. Our wire wheel is about 6'' in diameter. Use a course grade wire wheel (unless you enjoy exhibit maintainence)—a fine wheel's wires will melt and spark away too rapidly. The front, top, and left sides of the box have glass windows (the aluminum was milled away), fixed in place with silicone sealant. A hole was drilled in the left window for the iron rod to pass through. (Glass drills are available from you local glazer.) Even though the sparks are visible through the glass, the glare is safe because the glass cuts out the harmful ultraviolet light. To aid the visitor in positioning the spectroscope, two socket-type guides, one top and one front, are provided; the tip of the spectroscope fits into each of these. These guides are bolted to the box through slots that allow adjustment back and forth as the wire brush wears (see diagram of box). The hot flying sparks from the wire wheel can pit the glass. We've taped microscope slides under under the spectroscope guides to protect the glass there; when the slides get dirty and pitted, we simply remove them and tape new ones in their place.

Our power supply was made from the remnants of an old welder (see schematic). You need a DC power supply that can deliver about 20 amps at about 10 volts. We placed a large inductor (value unknown, but it weighs a ton!), recovered from the welder, in series with the power supply. This inductor maintains the spark and gives the power supply more ''kick.'' Since it is possible for the visitor to push the iron rod firmly into the brush, a current limiter of some sort is needed; we use a 2500 watt searchlight bulb. We like the bulb better than a standard resistor because it glows when in operation, announcing its purpose in the circuit. All electrical mechanisms are controlled with a timer relay (set to about 30 seconds), triggered by the button on the table top; this keeps the exhibit from running all the time.

The object of the exhibit is to allow the visitor to compare a complicated spectrum with a simple spectrum. We originally tried using hydrogen tubes (and went through several designs in the process), but un-

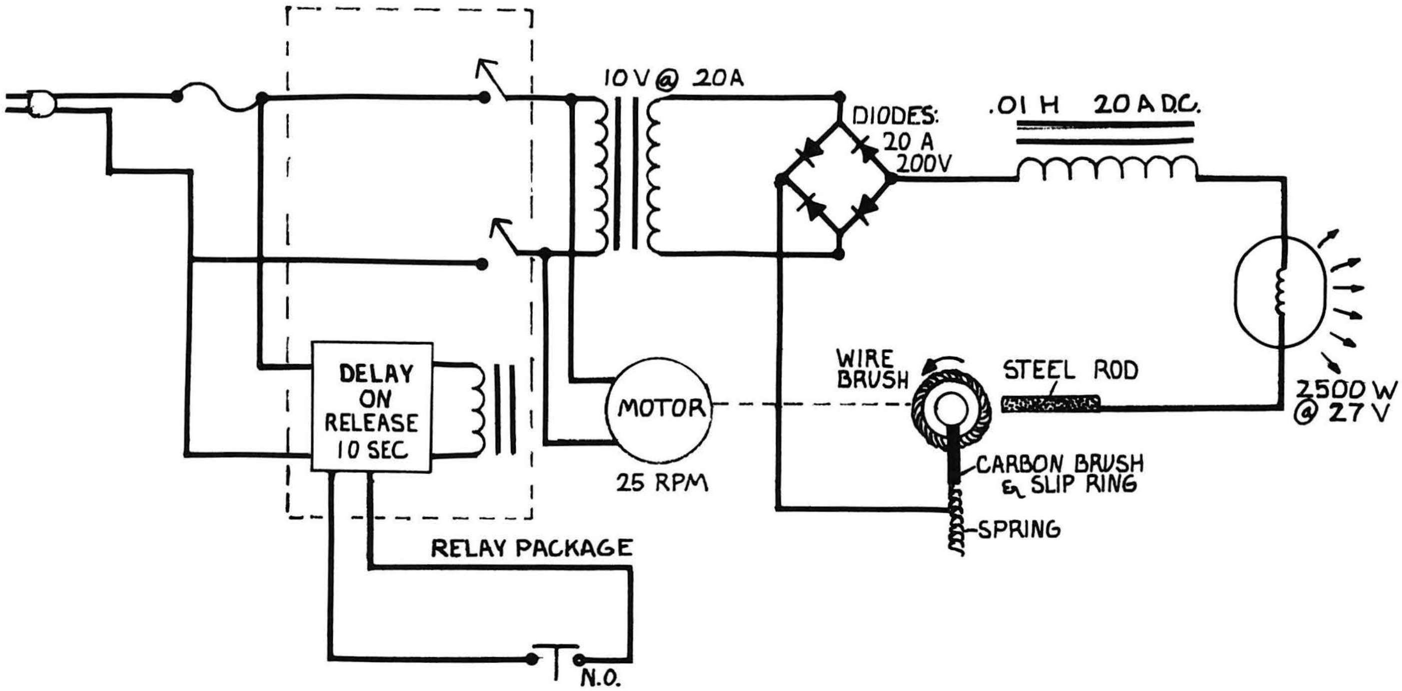

fortunately these tubes were very short lived. We settled on the next simplest element, helium. Helium tubes are extremely reliable and long lived. The helium tubes and power supply are available commercially from:

Electro-technic Products Co.
4642 N. Ravenswood Ave.
Chicago, IL 60640
telephone: (312) 561-2191

We supply the visitor with two different spectrum viewing devices. Because the helium tube is already a line source, all that is needed is a piece of diffraction grating. Be sure to get single-axis, high dispersion grating if possible. Two-axis grating ("star-grating" or "Jupiterscope" grating) will only confuse the person viewing. Good grating is available from:

Spectratek
PO Box 3407
Culver City, CA 90230
telephone: (213) 473-4966

Order the "Pin spot filter". This is a 6" by 6" grating that has good dispersion and efficiency. You can cut it in half and make two grating viewers with each sheet. We sandwich the grating between 1/8" plexiglas and attach it to the exhibit with a steel-cable. The steel cable has a lead weight at the other end that slides in a restraining tube.

The other spectrum viewing device is a direct-vision-prism spectroscope. These are available from:

Edmund Scientific Co.
101 East Gloucester Pike
Barrington, NJ 08007

The prism spectroscope is a relatively delicate device that must be protected. We have enclosed ours in a tubular PVC housing and cabled it with a weighted steel cable and tube assembly. Be sure that it is securely held. This device is a high theft item (we have lost several from our exhibits).

Related Exploratorium Exhibits

Atoms and Molecules

Argon Candle; Curie Point; Color Temperatures; Bubbles; Electromagnetic Spectrum; Gas Model I-IV; Heat Loss; Heated Model House; Magnetic Light Sorter; Molecular Buffeting Real & Model; Patterns of Scattered Light; Periodic Table; Visible Magnetic Domains; Glow Wheel; Polaroid Projector; Polaroid Sunglasses; Rotating Light.

Production of Light

Lanterna Magica; Stored Light; Kinetic Light Sculpture; Polarized Radio Waves; Tesla Coil; Bridge Light; Hot Spot; Photoelectricity I & Model; Fluorescent Rods; Spark Chamber; Sun Painting; Spectra; AM Lightning; Fluorescent Tube; Hot Light; Laser Demonstration; Solar Signature.

Diffraction

Diffraction; Glass Catfish; Image Quality; Pinhole Magnifier; Points of Light; Water Waves; Hologram—Skull; Long Path Diffraction; Blue Sky; DEWA Hologram.

Spectrum

Color Removal; Bubble Painting; Low Frequency Light; Rainbow Encounters; Light Island; Glass Bead Rainbow.

Iron Sparks

Atomic spectra presented a major puzzle at the beginning of the twentieth century. Some elements, like helium, produce a very simple and regular pattern of colors, while others, like iron, produce hundreds of different colors.

To do and notice

Push the button to start. If the exhibit shuts off during use, push the button to restart.

Look at the white glowing helium gas at the left of the exhibit through the flat plastic square containing the diffraction grating. Notice the colored lines of red, yellow, green and blue in the spectrum.

Turn the red knob to move the iron rod into the wire wheel. This will make a white iron spark. You have to adjust the rod to keep the spark going.

Look at the white iron spark through the tube spectroscope (the white tube) by placing the tube into the white collar over the spark. Notice the large number of colored lines in the iron spark spectrum as compared with the helium gas spectrum.

Look at other light sources in the museum with the tube spectroscope and the flat diffraction grating.

What's going on

Four different kinds of spectra in this exhibit write the signatures of four different kinds of light. As you look at the various glowing objects through the prisms and diffraction gratings, you can get a feeling for how complicated the problem of light was in the time of Einstein.

When you turn on the exhibit, an electric current flows through the thin glass tube which contains helium gas. The moving charges jolt the helium atoms into "excited states"; as they jump back to their "ground states," they give off discrete bundles of light in the form of light quanta. Each quantum has its own characteristic color. The sharp colored lines that you see when you look at the helium gas through a diffraction grating tell you exactly which energy states are in the helium atom.

Turning on the exhibit also builds up electric charges on the iron brush, and starts it spinning; opposite charges pile up on the iron rod. When you ram the two together, the current flows, and the tips of the iron brush heat up. Some fragments of iron actually vaporize, creating an iron gas, much like the helium gas. Current flows through the iron gas and, as in the case of the helium gas, the moving charges excite the iron atoms and they give off light. If you look through the prism spectroscope at these spectral lines, however, you will see that they are much more complicated. It took the discovery of a simple pattern like that of helium or hydrogen before people could figure out what the spectral lines were really all about.

As the rotating iron brush scrapes on the iron rod, small pieces of glowing iron fly out. These glowing bits of iron create another kind of light. Fast-moving electrons in the heated iron create a continuous spectrum of incandescent light, which you see not as a series of sharp lines, but as a broad fuzzy rainbow.

When the iron gets so hot that the current threatens to melt the brush entirely, it begins to heat up the filament in the large search bulb instead. The filament glows red hot, and gives off a continuous spectrum of incandescent light. In fact, incandescence means light created from the thermal motion of electrons in things that are very hot, including the sun.

The prism spectroscope is made with a special prism which lets you see the spectrum directly ahead in your line of vision, rather than off to one side as with a normal prism or a diffraction grating.

Historical significance

Burning an element in a flame or exciting a gas with an electric current produces a characteristic emission spectrum. However, the spectrum of an element also changes with the temperature of the flame or the gas. In general, an emission spectrum due to an electric arc produces more lines as more current is passed through it. Spectra produced by sparks have even more pronounced emission lines. Some elements, such as hydrogen and helium, produce a few spectral colors; others, such as iron, produce hundreds.

It seemed impossible that a theory could be produced which would explain it all. However, in the early 20th century such a theory was created. According to the Quantum Theory of the atom, proposed in 1913 by Niels Bohr, this profusion of lines arises because the greater the energy with which the atom is disturbed, the higher and more numerous are the excited quantum states into which a radiating electron may be thrust.

Laser Booth

Description

The *Laser Booth* is an excellent tool and environment for demonstrating some of the properties and uses of laser light. It has evolved through several generations into its present design, which takes into consideration storage and security requirements as well as the pedagogic functions of the exhibit.

Explainers use a laser and a flashlight to compare the coherent, monochromatic light of the former to the white light of the latter. They also describe how a laser works, using an exposed laser at a nearby exhibit. Each Explainer modifies the demonstration to suit his or her own interests.

Construction

Several objectives were set for the shape of this exhibit: it had to allow the Explainer to give a demonstration to a reasonable number of people; it had to have storage room for all of the props including secure storage for the laser; and it had to have some means for keeping Explainers from dropping the laser (in one particularly bad 2-week period three lasers were dropped!).

The table is curved in order to maximize the viewing audience. At each end of the table are towers that contain shelving, exhibit lighting, and the laser screen (see drawing above). Our table describes an approximate 90 degree arc, with the radius of the outside curve measuring about 7 feet. The table is 28'' wide, so the inside curve has a radius of about 4 feet 10 inches. Each of the two towers is constructed differently. The side of the left-hand tower that faces the table is removable (see drawing for orientation). This allows the Explainers to place on the shelves things that shine out on the screen (such as the white light prism), without cluttering the table top. We have also put a floodlamp fixture inside this tower; the lamp can be switched on to illuminate the table when necessary. The right-hand tower's table-facing side is fixed in place and acts as a screen for various experiments. We also provide an 8'' diameter hand-held screen (with hardwood handle) for close-up work. A 3-1/2'' high hardwood lip has been wrapped around the table front, to keep the beam from escaping when the laser is sitting on the table. Power for the laser, flashlight, prism

assembly, and fog generator (see below) is supplied by outlets on the table top, and a switch here controls the floodlight. The table surface is covered with light gray formica, the screen with flat white formica, and the rest of the exhibit is painted black.

Our solution to the laser dropping problem was to tie the laser to a counterweighted cable which descends from an overhead boom. The counterweight rides up and down in the boom's supporting column, which pivots in nylon bushings installed in the left tower (see diagram).

The laser used in this exhibit is a .5 milliwatt Helium-Neon laser unit manufactured by Spectra-Physics (model 155). We have found this laser to be reliable and long-lived. Contact Spectra-Physics at:

Spectra-Physics
Laser Products Division
1250 West Middlefield Rd.
Mountain View, CA 94042
telephone: (415) 961-2550

For information on laser safety and regulations, contact:

U.S. Dept. of Health and Human Services
Public Health Services
Food and Drug Administration
Center for Devices and Radiological Health
Rockville, Maryland 20857

We provide a variety of props for the Explainers to use. They are:

1) A fog generator makes the path of the laser visible by scattering and reflecting the light in the tiny water droplets of the fog. By providing a source of clean ''smoke'' we hope to discourage the use of cigarette smoke, which is a nuisance and health hazard. We used to use chalk dust but had to clean the laser often. The fog is produced by a ''Bionaire'' ultrasonic vaporizer/humidifier available from:

Bionaire Corporation
565A Commerce St.
Franklin Lakes, NJ 07417
telephone: (201)337-2110

Note that we modified the Bionaire unit by defeating its humidity switch—which shuts the unit off when the humidity reaches a certain level—so that the unit runs continuously. In case you want to build your own, components for ultrasonic vaporizers are available from TDK. Phone (312) 679-8200 and ask for catalog BCE847-027C. We attached a long vacuum cleaner hose to the top of the unit, which allows the explainers to squirt fog wherever they wish.

2) Small mirrors can be used to demonstrate the law of reflection, or to show how one might use a laser to form a perimeter alarm system by sending the laser around a designated area. We use 3'' by 5'' mirrors backed with 1/4'' masonite. Heavy 90 degree angle iron pieces are glued to the masonite and act as stands (see diagram).

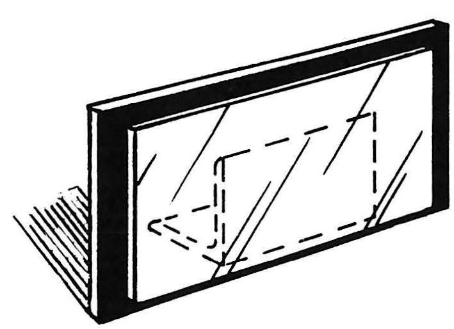

Small Mirror with Stand

3) The principle of total internal reflection and its application in fiber

optics is demonstrated with a gently curved 1'' diameter clear plexiglas rod. Normal (small) fiber optics can be supplied to supplement the demonstration.

4) Lasers can be used to identify diamonds. We provide the Explainers with a clear plexiglas dome fastened to a black plywood base. The dome has a hole in its side large enough for a person to put their hand (and ring) into, and a small hole in its top through which the laser is shined down onto the diamond (see diagram). The pattern of reflected light can be made visible with the fog generator; the pattern produced on the dome (its ''diamond print'') is unique to the diamond. You might want to add another hole in the dome for introduction of the fog (ours doesn't have this feature).

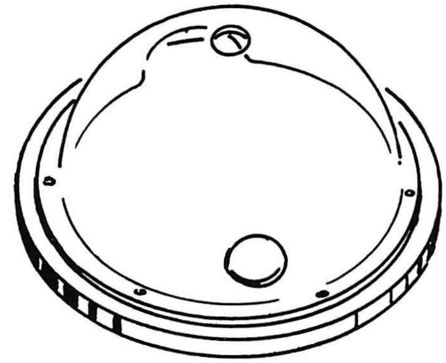

''Diamond Print'' Dome with Fog Hole

5) A simple flashlight is used to compare the laser light with incoherent white light. The light from the flashlight contains all colors (which can be viewed by the visitor through a diffraction grating), while the laser is monochromatic. The light from the flashlight also spreads out while the laser light is collimated into a narrow and slowly expanding beam. Our flashlight is powered with an external power supply, and plugs into a special outlet on the table top.

To supplement this demonstration, we have also built a small spectrum projector. This takes light from a straight incandescent filament, and focuses the image of the filament on the screen with a projection lens. Just put a good prism between the lamp and lens (you'll have to move the lens because the prism bends the light beam) and voila! —a beautiful spectrum. You might also want to provide a separate prism that the laser could be passed through, to show that the laser light isn't broken up into any other colors.

6) Several demonstrations are combined into one larger piece of apparatus, which consists of a masonite wheel mounted on a 2x4 upright and stand. A number of objects are fixed in holes around the perimeter of the wheel, so that the laser light may be passed through whichever medium is rotated into its path.

Colored filters can demonstrate the monochromaticity of the light. We supply red, green, and magenta filters. The laser passes through the red and magenta filters, but not through the green.

Rippled glass or plexiglas (like that found in your shower door) produces beautiful interference effects like those seen in light shows such as Laserium. This also demonstrates refraction.

Two razor blades placed with their edges close together are used to demonstrate (single slit) diffraction and interference. We have other exhibits in the museum to supplement these demonstrations. Shining the laser through a feather or thin cloth also demonstrates diffraction and interference.

7) Shining the laser through flat cylindrical lenses can demonstrate both refraction and the focusing effect of lenses. Several different shapes should be made available: convex, concave, rectangular block, and triangular (prism). These can be made from 1'' thick plexiglas (cut, sanded, and flamepolished), or purchased from just about any scientific supply house

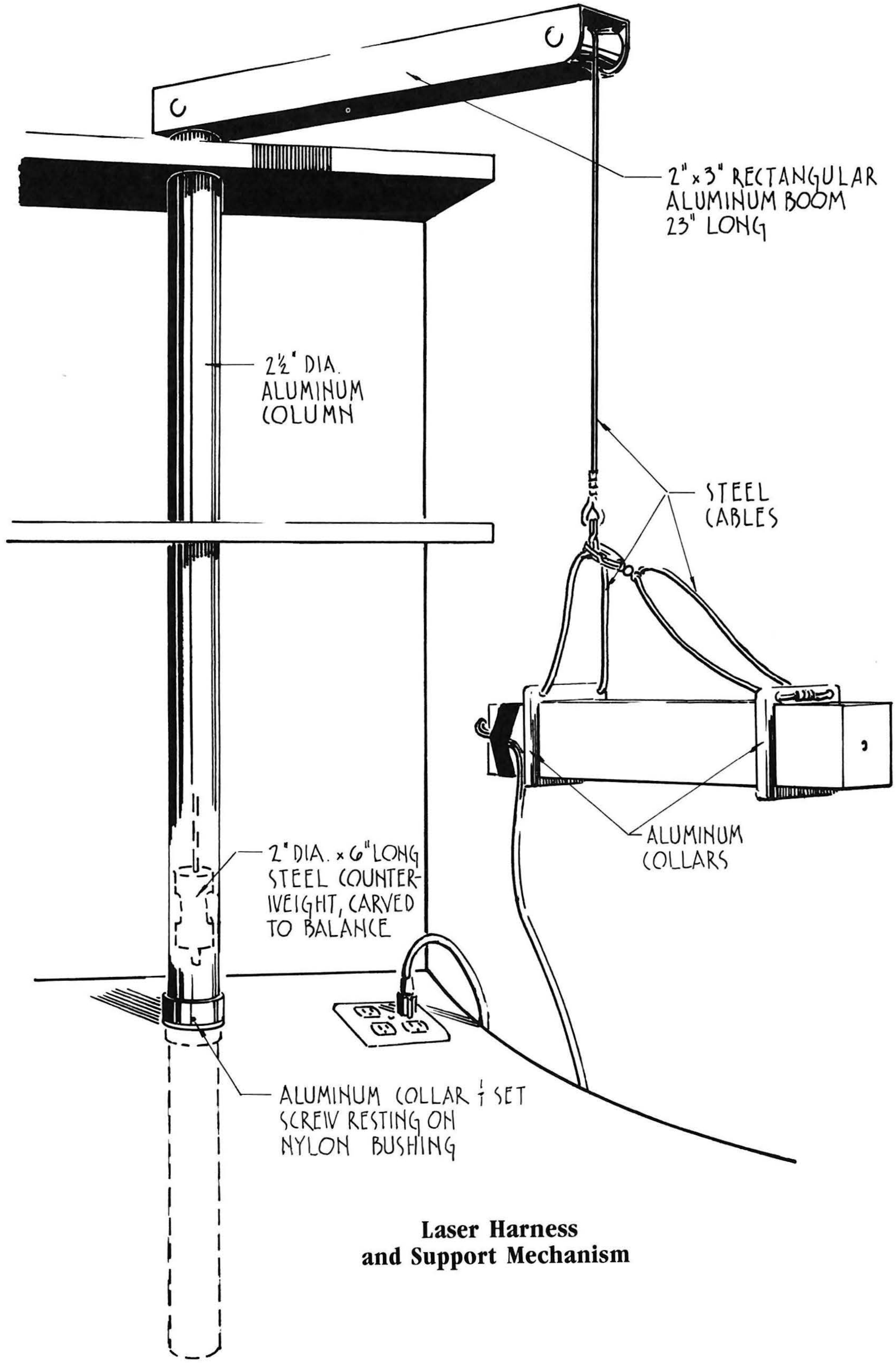

**Laser Harness
and Support Mechanism**

(Cenco, Klinger, Sargent-Welch, etc.).

8) We have provided a small transmission hologram, mounted in a handheld paddle, which can be used two ways. First, defocused laser light (laser light passed through a short focal length concave lens) can be shined at the hologram and viewed in the normal fashion. Second, the laser can also be passed directly through the hologram, with the somewhat dim image projected on a screen in two dimensions. The viewpoint of this two dimensional image depends on the point on the hologram that the laser is passing through.

Related Exploratorium Exhibits

Lasers

Laser Communicator; C-The Light; Long Path Diffraction; Michelson Interferometer; Million to One; Points of Light; Hologram—Skull; DEWA Hologram.

Color

Bridge Light; Aurora; Blue Sky; Color Reversal; Color Shadows; Color Removal; Light Island; Lumen Illusion; Prism Tree; Soap Bubbles; Soap Film Painting; Spectra; Sun Painting; Benham's Disc; Color Sum; Bird in a Cage; Color Temperatures; Corona Motor; Distilled Light; Electromagnetic Spectrum; Fluorescent Tube; Hot Light; Iron Sparks; Low Frequency Light; Patterns of Scattered Light; Argon Candle; Glow Wheel; Polaroid Projector; Polaroid Sunglasses; Solar Signature.

Interference

Coated Optics; Leyes Photos; Multiple Raccoon Eyes; Wave Upon Wave; Diffraction; Soap Bubbles; Soap Film Painting; Dichroic Clock; Water Waves; Does Your Back Curve.

Reflection

Corner Reflector; Primary of a Cube; Shadow Kaleidoscope; Duck into Kaleidoscope; Everyone is You and Me; Look into Infinity; Rainbow Encounters; Reflection Blocker; Anti-Gravity Mirror; Rear View; Pinball Machine.

Refraction

Disappearing Glass Rods; Giant Lens; Bathroom Window Optics; Critical Angle; Cow's Eye Dissection; Conversation Piece; Glass Bead Rainbow; Multiple Lens Box; Rainbow Edges in Your Eye & Lens; Convection Currents; Image Quality; Air Reed; Rotating Light.

Light Island

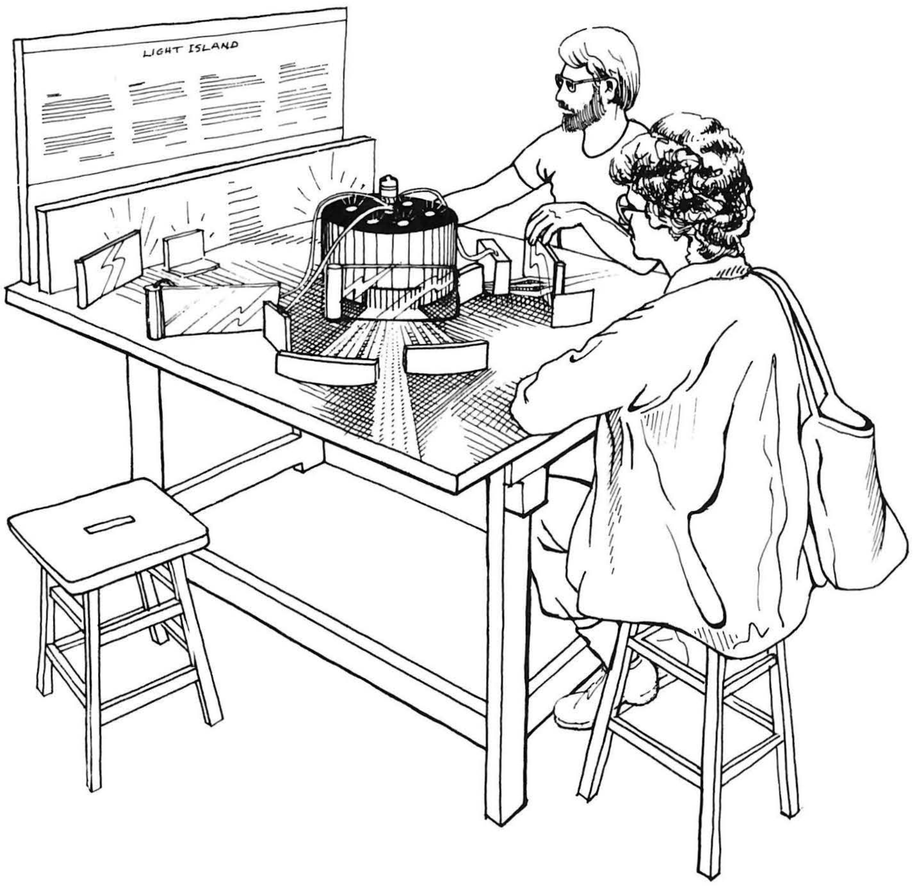

Description

Light Island is a wonderful exhibit that allows experimentation with many aspects of light. Using only cheap mirrors, filters, prisms, and plexiglas lenses, the visitor can play with light and observe reflection, refraction, color mixing and separation, and other optical phenomena.

Construction

This exhibit is made up of a light source that projects rays of white and colored light on a table top, and various optical components that bend, reflect, and disperse these rays.

The light source is a 200 watt clear incandescent light bulb. Be sure to use a bulb that has a straight vertical filament. If the filament zigzags the light source will not produce narrow beams through the slitted windows. The bulb is housed in a cylindrical cardboard light shield made of concrete form tube available from building supply houses (look in the phone book under "concrete"). Ours is 10" in diameter and 7" tall. The light bulb is mounted upside down from the circular plywood top of the cylinder, which is generously drilled with 1" ventilation holes. The light is mounted from the top rather than from below to put the filament just above table height. The cylinder is recessed into a hole in the table and fixed in place with aluminum angles and bolts. Another piece of wood, drilled with ventilation holes, is screwed to the bottom of the table to cover the bottom of the light source. Four rectangular windows are cut in the tube at table height. One is slitted to allow two narrow beams of white light through, while a second one lets several narrow beams through.

Light Source (Section)

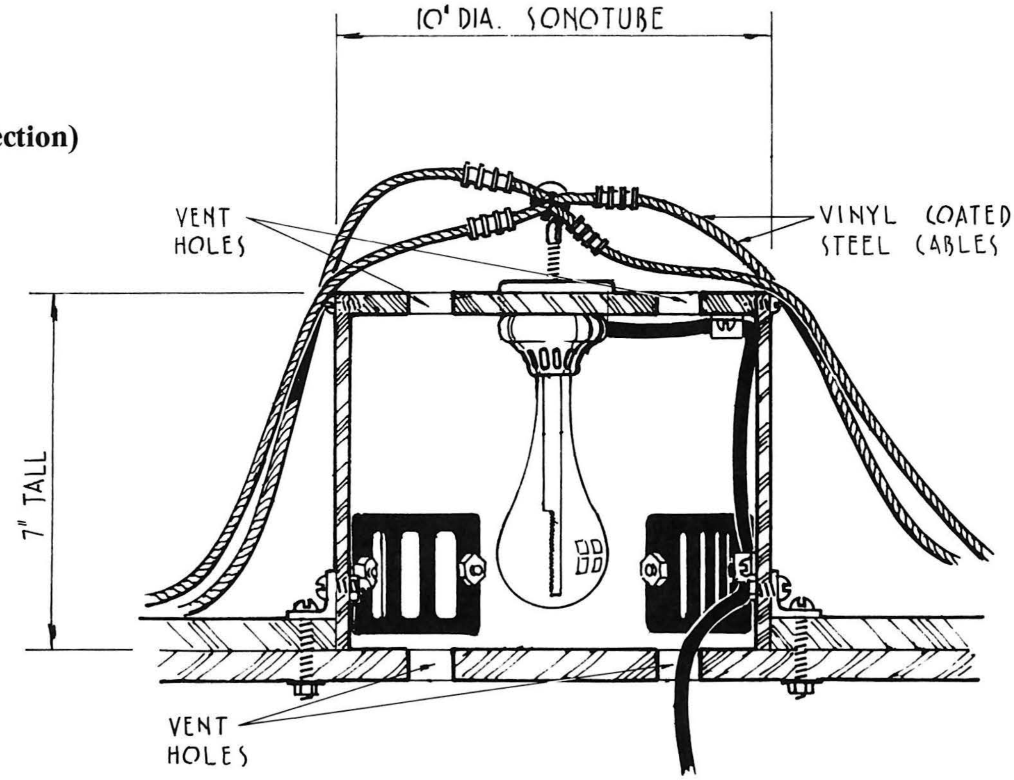

Each of the two remaining windows has three colored filters (red, green, and blue); one of these windows allows wide beams through, the other, narrow beams. Vertical screens at one end of the table provide surfaces to mix colors and make shadows. The screens and table top are plywood surfaced with white formica.

Objects on the table include:

1) Small mirrors
2) A curved mirror
3) Positive and negative lenses
4) Colored filters
5) A prism and a diffraction grating

The small mirrors are 3'' by 5'' and can be purchased from local glass suppliers. If you buy ''seconds'' they should be very cheap (around 20 cents each in our case). These mirrors are mounted with silicone sealant to 1/8'' masonite backs, which are then glued to stands made of 2'' sections of 2'' wide aluminum angle. Wood blocks can also be used if you don't have the angle. The mirrors are cheap enough to leave loose and in our environment are rarely stolen.

The curved mirror is a piece of photographic ferrotyping plate glued with silicone seal to a cut curved piece of hardwood (maple works well). Both the front and back sides have mirrors glued to them, providing a convex and a concave mirror. Ours is left loose on the table. This component can also be purchased from:

Klinger Scientific
83-45 Parsons Blvd.
Jamaica, New York 11432
telephone: (212) 657-0335

The positive and negative lenses can also be purchased from Klinger or cut from 1 1/2'' plexiglas and either flame polished or polished on a polishing wheel. It is desirable to make the curves of the two lenses the same radius so that they may be put together into a single rectangular block

Prism Holder

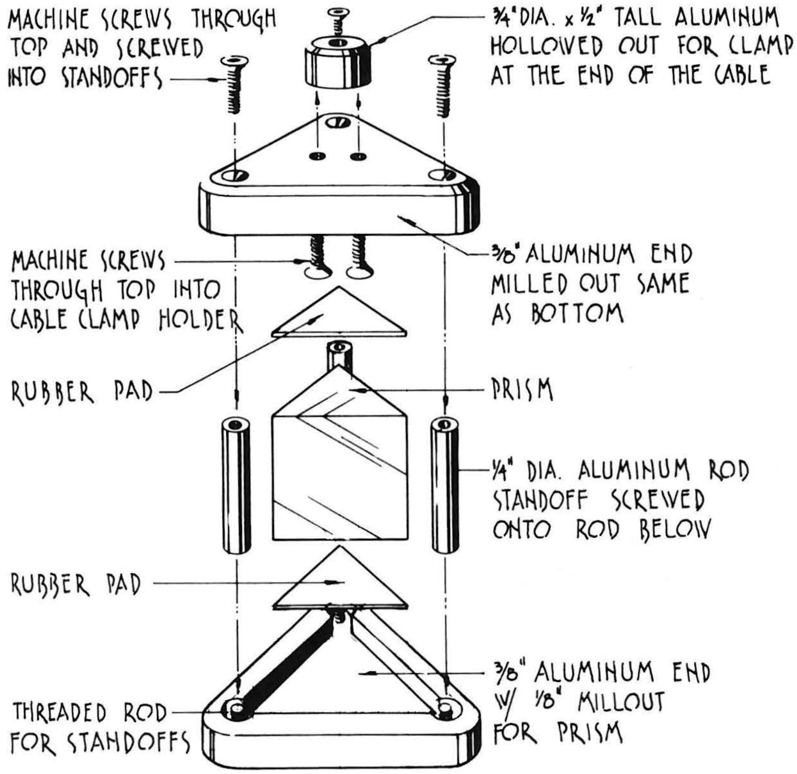

showing the cancellation of the converging and diverging effects.

The colored filters (red, green, and blue) are cut from standard colored plexiglas (see below) and fitted with handles made from 1'' plexiglas rod slotted to fit the 1/4'' filter. Handles are solvent cemented in place, and serve a dual purpose: they make it look like the filters belong on the exhibit and are not simply scraps of colored plexi left there by accident; and they keep the filters from lying flat on the table and becoming scratched (they do anyway, but with the handles they get scratched slower!). These filters measure 10'' x 4 1/2'' and are left loose on the table.

Here are the numbers for the colored filters:

Plastic: CRYO ACRYLITE: #210-0 (Red); #408-5 (Amber); #545-2 (Green); #668-0 (Blue)

Gels: ROSCOLENE FILTERS: #823 (Medium Red); #807 (Dark Lemon); #874 (Medium Green); #857 (Medium Blue)

The prism is a 60 degrees heavy flint glass spectroscopic prism. We've mounted ours in an aluminum casing (see diagram) to protect it from abuse and chipping. This prism is available from Klinger, Edmund Scientific, and many other optical companies. Our diffraction grating is a single axis high efficiency holographically produced grating.

The only components tied to the exhibit are the lenses, prism and diffraction grating. They are connected with 1/16'' vinyl coated steel cable to an eye bolt sticking up from the center of the light source. All of the tied items can be used at any of the four stations. At the lens end of the cable we insert a ball bearing swivel to help keep the cable from twisting up. These extremely useful swivels are available from:

Sanpo Swivels
18011 Skypark Cr.
Suite K
Santa Rosa, CA
tel: (714) 979-2980

Critique and Speculation

Even with the swivels at one end, the cables still tend to get braided. A swivel arrangement in the center would help solve this problem. Adding swivels to the cables also increases the flexibility of movement.

We have tried substituting plexiglas mirrors for glass mirrors but have gone back to glass because the plexi scratches so easily. The glass mirrors are also cheaper.

Exploratorium Exhibit Graphics

Light Island

This exhibit lets you play with mirrors, lenses, prisms, and light.

To do and notice

○ Lenses bend light. The ten small slits in the drum create ten beams of white light. Put the convex lens near the drum so that several beams of light shine out through the curved side. The convex lens bends the light to bring the beams together.

○ Replace the convex lens with the concave lens, making sure that the light shines out through the curved side of the lens. The concave lens makes the beams spread out.

○ Use the curved mirrors to reflect several beams of white light. A mirror curved one way brings the reflected beams together, acting like a convex lens. A mirror curved the other way spreads the beams apart, acting like a concave lens.

○ Colored filters block some colors of light. Put a filter in front of the red, blue, and green lights to see what colors pass through the colored plastic. Notice what colors are blocked.

To do and notice

○ Stand a flat mirror in the beam of red light. Move the mirror around until you reflect the red light onto the white screen below this sign. Use another mirror to overlap green light with the red light on the screen. Notice that the colors combine to make yellow.

○ Use the mirrors to mix blue light with red light. Try combining blue and green. What happens if you mix all three colors?

○ Make colored shadows by putting your finger several inches in front of the screen where two or more colors overlap.

○ Prisms separate the colors that make up white light. Slowly rotate a prism in the path of a single beam of white light until you see rainbow colors fan out across the table.

Related Exploratorium Exhibits

Reflection Plane

Corner Reflector; Duck Into Kaleidoscope; Everyone is You and Me; Look Into Infinity; Primary of a Cube; Mirrorly a Window; Shadow Kaleidoscope; Porro Prism; Rear View.

Absorption

Color Table; Distilled Light; Frequency Excluder; Million to One; Stored Light; Wave Machine; Color Removal.

Color

Bridge Light; Dichroic Clock; Model of Color TV; Prism Tree; Selective Color Focusing; Soap Bubbles; Soap Film Painting; Spectra.

Color Mixing

Aurora; Colored Shadows; Sun Painting.

Refraction, Internal

Critical Angle; Fluorescent Rods; Reverse Distance; Laser Demo.

Refraction

Cows Eye Dissection; Disappearing Glass Rods; Glass Bead Rainbow; Leyes Photos; Rainbow Encounters; Rotating Light; Lens Table; Traffic Light; Image Quality; Giant Lens; Rainbow Edges in Your Eye; Refraction Block; Water Sphere Lens.

Heat and Temperature

Exhibits in this section of the Cookbook look at the relationship between heat and temperature. A dramatic example of this relationship can be felt in the *Cold Metal* exhibit when you put your hand on metal, wood and styrofoam plates. Though all three are the same temperature, the metal feels colder than the wood and styrofoam because it conducts more heat from your hand. At the *Water Freezer* you can see that evaporation cools water, and that water evaporates more quickly as the air pressure on it is reduced by a vacuum pump. You can also see that when materials heat up, their properties may change. In *Curie Point* a piece of metal becomes nonmagnetic when it gets very hot. *Brownian Motion* (Molecular Buffeting) demonstrates that as things get hotter, their molecules move with increasing energy. A practical side of heat and temperature is demonstrated in Skillets. Here you can compare the different cooking properties of skillets that are made from different materials, such as cast iron, aluminum, and stainless steel with and without a copper bottom.

Heat and Temperature Exhibits in Cookbooks I, II, and III:

Cold Metal

Description

Cold Metal demonstrates that using your hand to measure temperature is not always reliable. The exhibit presents three different materials to touch: metal, wood, and plastic foam. Each material seems to be a different temperature. This is curious since all of the materials should be the same temperature as their environment; a temperature probe placed on each of them reveals that they do in fact all register identical temperatures.

The visitor's hand is, in this situation, a better indicator of heat flow than of actual temperature. Metal is a better conductor than wood or foam, so it feels colder.

Construction

This exhibit is built on a plywood board—covered with formica and framed with hardwood—that has been set at a 45 degree incline for convenience of viewing and access. A riveted sheet metal box fits into a rectangular cutout in the lower end of this board; the three slabs of material—aluminum, wood, and plastic foam, all 1x6x9''—sit horizontally in this box. The aluminum slab can absorb heat readily and we were worried that it might heat up. To prevent this we slotted the back of the slab with a saw; the slots run width-wise across the slab and are 3/32'' wide, 7/8'' deep, and 1/4'' apart. To allow air to flow through the slots, a hole was cut in the bottom of the sheet metal box below the aluminum slab, leaving 1/2'' support around the edge. A small muffin fan (with finger guards) is mounted under the box and points at the bottom of the aluminum slab.

The wood slab is made of a light hardwood with closed grain—open grain woods are difficult to clean. Do not varnish the wood as the thermal properties will be changed.

The plastic is polyethylene foam. This material is used for packing and

Temperature Probe Detail

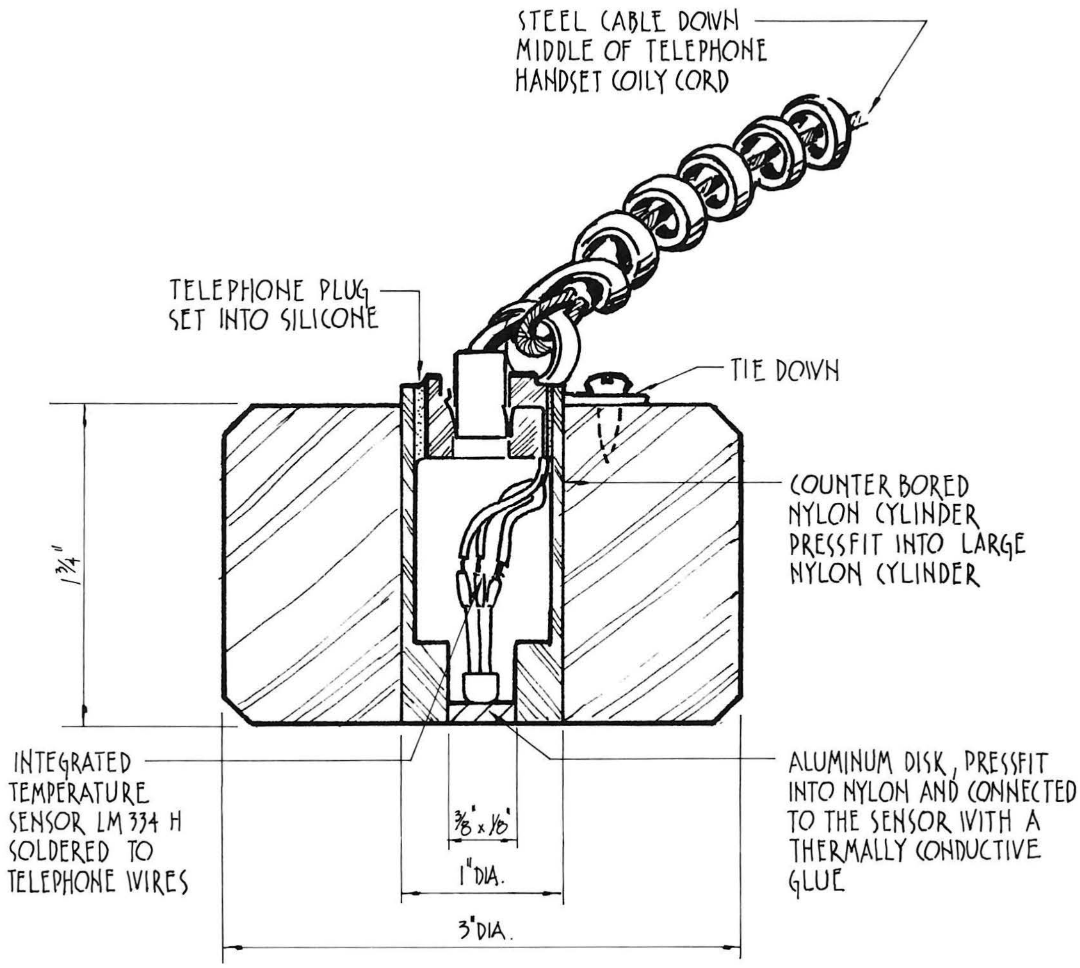

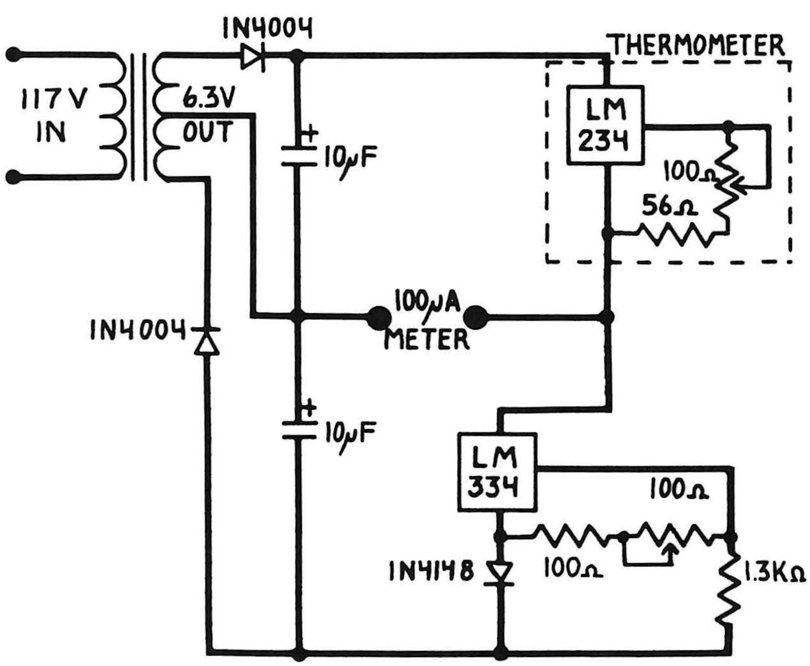

Temperature Probe Schematic

insulating, and is much more rugged and durable than the styrofoam we first tried.

We measure the temperature of the slabs with an electronic probe of our own design (see schematic), which has proved reliable. If you can't design and build your own circuits, you might try one of the many inexpensive digital thermometers that have come on the market since we built this exhibit. Note that you will have to protect the probe of a store-bought thermometer or it will not stand up to public abuse. We have encased ours in a large block of nylon (3'' diameter and 1-3/4'' high). The probe is connected to the meter circuit with a telephone handset coily-cord. A piece of vinyl covered 1/16'' steel cable—adjusted shorter than the coily-cord to protect against stretching—runs down the center of the coily-cord and is fixed to the nylon probe on one end and the exhibit at the other. The meter face is redrawn to indicate degrees (ours, shame on us, is marked in degrees Fahrenheit).

Critique and Speculation

In spite of all effort to make the plastic foam slab last, it does need to be replaced every so often. The temperature probe gets knocked around a lot, and you may have to do some experimenting to find a probe-protector that works for you.

Related Exploratorium Exhibits

Cues, Dominant

Far-Out Corners; Floating Rings; Horse and Cowboy; Impossible Triangle; Reverse Masks; Trapezoidal Window; Cheshire Cat; Reach for It; Cardboard Tube Syllabus; Gray Step I, II, III, IV.

Perception of Temperature

Hot or Cold Chimneys; Hot and Cold

Detection and Measuring Devices

AM Radio; Cool Hot Rod; Dial Indicator; Does Your Back Curve; Drum; Earpiece; Giant Meter; Grease Spot Photometer; Heartbeat; Hot Effects; Nerve Impulse; Seismograph; Speedometer; Standards Display; Sun Dial; Sweat Detector; Tools Display; Touch Sensitivity; Voice Trombone; Voltage Drop; Weather Station; Cloud Chamber; Give and Take; Michelson Interferometer; Moire Patterns; Reaction Time; Spark Chamber; Suspense; Another Way of Seeing; Glow Wheel.

Heat Conduction

Heat Loss; Heated Model House; Convection Currents; Very Hot, Small Sparks.

Heat Sensitivity

Heat Rays & Light Rays; Low Frequency Light; Curie Point Motor; Mimosa House.

Exploratorium Exhibit Graphics

COLD METAL

Sometimes your sense of touch is not a good judge of temperature.

To do and notice

Feel each of the three surfaces with the palm of your hand. Notice that the styrofoam seems relatively warm, the wood feels a bit colder, and the metal feels the coldest of the three.

Place the thermo-probe on the three surfaces and notice that all three are about the same temperature, even though they feel different when you touch them.

You can test the thermo-probe by holding it for a moment in the palm of your hand.

What is going on

The temperature-sensitive nerve endings in your skin detect the difference between your inside body temperature and your outside skin temperature. When your skin cools down, the temperature-sensitive nerves tell you that the object you are touching is cold. An object that feels cold must be colder than your hand and it must carry your body heat away from your hand, so that your skin cools down.

The styrofoam, the wood, and the metal in this exhibit are all the same temperature, and they are all colder than your hand. They are at room temperature (60° to 70° Fahrenheit) but they do not feel equally cold because they do not carry the heat away from your hand at the same rate.

Styrofoam is an insulator, a very poor conductor of heat. When your hand touches the styrofoam, it warms the styrofoam surface. But since this heat is not carried away quickly, the surface of the styrofoam becomes as warm as your hand and little or no additional heat leaves your hand to cool your skin. The nerve endings of your hand stay warm and the styrofoam continues to feel warm.

The metal, in contrast, carries heat away quickly, cooling your skin and the nerve endings of your hand. Metal is a good conductor of heat. Your hand warms the metal surface, but the heat is quickly carried away into the bulk of the metal, leaving the metal surface relatively cool, and cooling your hand in the process.

Historical significance

Before the difference between heat and temperature could be understood, thermometers—which measure temperature objectively—had to be invented and developed. The thermometer was developed by Galileo and his contemporaries early in the seventeenth century.

Convection Currents

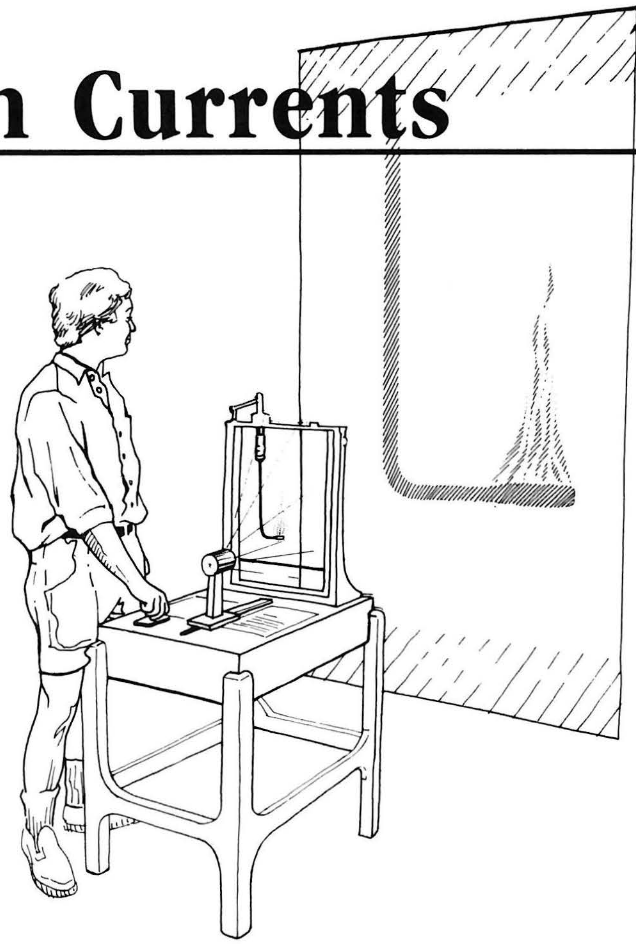

Description

A small heater is immersed in a thin vertical tank of water. This tank sits between a point light source and a screen (we use a white wall). When the heater is turned on, the water nearby heats and rises due to convection. This is easily visible on the screen because the heated water refracts the light from the point source differently than the cooler water around it (heated water is less dense and hence refracts less). A beautiful display of the convection results. The light source can be slid closer to and further from the tank, changing the magnification of the projected image. The heater is on a rheostat so that its heat output may be varied. It can also be moved by pulling on a string, so that the visitor can play with the heater, shaking bubbles from it or stirring up the tank.

Construction

This exhibit consists of three basic units: the tank, the heater assembly, and the light source.

The tank must be designed to radiate away heat as efficiently as possible. If the entire tank becomes uniformly as hot as the heating element, not only will no convection occur, but people may burn themselves as well.

Our tank frame consists of three pieces of 1 1/2" square aluminum tubing with 1/8" walls. These are TIG welded into a "U". To increase air flow for cooling efficiency, we have butt-welded the tubes with the uprights touching the table, rather than joining them at 45 degrees. Air exits through large holes drilled at the top sides of the tubes. You can force-ventilate the tubes, although we have not found this to be necessary in our moderate climate. A drain tube is welded or glued to a hole in the upper surface of the bottom frame piece, and protrudes through the bottom of the tank to the underside of the table. The frame is fastened to the table with two bolts, which thread into blocks that are welded inside the bottom tube of the frame. We have also welded two "feet" to the back of the frame to add stability.

Plate glass 1/4" thick is bonded to the front and back of the frame with silicon rubber sealant. We employ the manufacturer's (Dow Corning) "Prime Coat" before gluing as this improves the performance of the adhesive. The glass overlaps the frame by only ½ inch. This is enough overlap to give a strong joint and yet not interfere with the heat-sink

Heater Assembly Mounting Detail

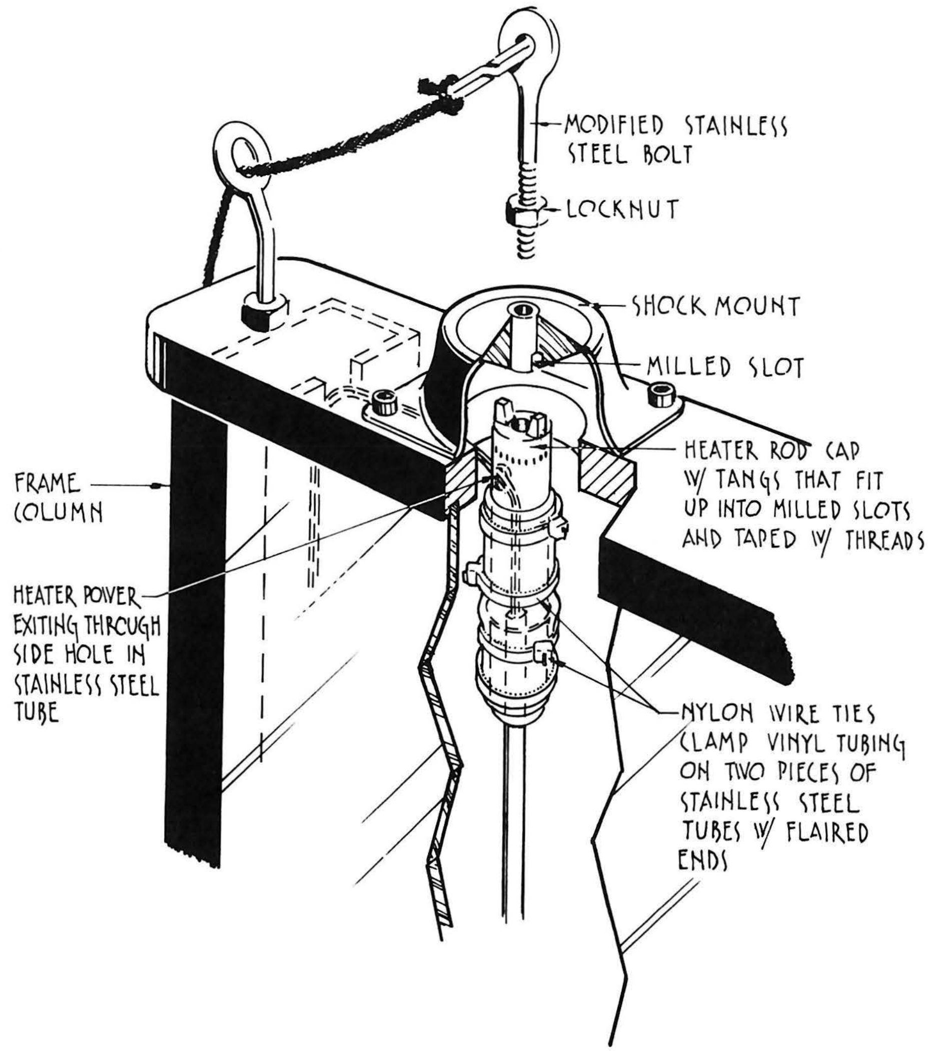

characteristics of the aluminum (aluminum conducts heat much better than glass). The silicon seal should be about 1/8 '' thick, which will allow for any differential thermal expansion between the aluminum and glass. The tank is therefore about 2 1/4'' thick (1/2'' glass, 1/4'' adhesive, and 1 1/2'' frame). Welded to the base of the tank are feet which are then bolted to the table. A 1/2'' thick aluminum top piece, which bolts into caps welded onto the top of the tubes, completes the tank. This top piece has milled slots in its underside to fit the glass walls, and will help prevent evaporation and spillage, as well as keeping junk from finding its way into the tank.

The heater assembly (see diagram) consists of the following parts:

1) A Watlow heater # E14JX5A available from Ms. Sarah Demostene, E. F. Norman Associates, 1430 Guerneville Road, Bldg. E, Suite 1, Santa Rosa, CA 95401-4158, Tel: 707-544-7454

2) A Lord Kinematic shock mount

3) A modified stainless steel 1/4-20 bolt

4) A short piece of 3/4'' OD, 1/2'' ID vinyl tubing.

The shock mount is placed near the left side of the tank and bolted to the tank lid. A small slot is milled in the underside of the shock mount,which mates with a tang in the heater-holder. This arrangement keeps the heater from rotating, so it remains parallel to the tank. The heater power leads must be well insulated. They pass through the vinyl tube decoupler into the stainless steel tube where they exit through a side

Lamp Assembly Detail

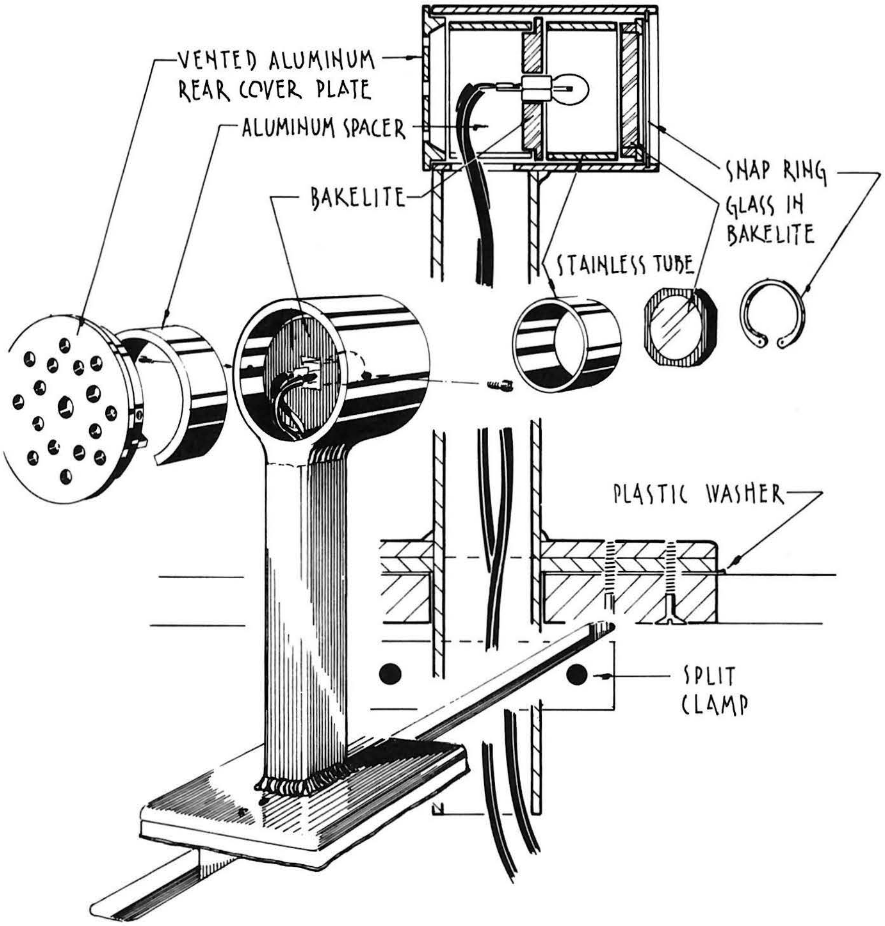

hole near the top. The wires are insulated with a short section of vinyl tube from the point at which they exit the heater to where they exit the tank through a small notch in the top of the left frame column. Since there is a large vent hole in the side of this column, the heater power wire is run down a short length of "U" channel welded to the inside of the frame tube. This protects the wires from poking and prodding. Power is supplied from below the table. Be sure to ground the tank frame, the dimmer, and the heater itself, to prevent electric shock.

We use a 6 volt, 10 watt GE 787 lamp because it is a very good point light source. The light assembly consists of an outer aluminum tube with a stainless steel inner tube around the lamp. The inner tube is insulated from the outer tube by two Bakelite spacers, one front and one back. This double tube arrangement keeps the assembly from becoming hot. Air cools the lamp by flowing up through the hollow 1 x 1 1/2" aluminum support and then out of the assembly. This support is TIG welded to the base plate which bears on the table top (see diagram). A plastic washer below this plate acts as a bearing. A split-clamp assembly prevents the lamp from being pulled from its slot in the table. Rubber bumper pads limit the excursion of the lamp and bear on the ends of the 1 x 1 1/2" tube below the table top, which is designed to stop the lamp's motion before the base plate covers the slot. Without this precaution a finger in the slot could be severely smashed by the base plate—so leave plenty of room. Round and smooth the ends of the slot, which should be made of hardwood, perhaps maple.

Benzalkonium chloride is added to the water of the tank (about 2 teaspoons of 17% solution) as an algaecidal agent.

Critique and Speculation

Our version of this exhibit takes some sophistication to build because of all the welding. You might be able to build something similar with glass and silicon seal the same way aquarium tanks are built. Make sure that the surface area of the tank is large compared to its volume so that it will be able to radiate away the heat generated inside. If the tank becomes too hot you will not get convection currents.

Exploratorium Exhibit Graphics

Convection Currents

Warm water rising through cooler water makes patterns of turbulence that bend light.

To do and notice

The knob controls a small heater in the water tank. Turn the knob off and then slowly turn it on by twisting it clockwise. Notice the moving patterns of brightness and shadow on the wall.

Gently pull the ring on the left side of the tank to shake the bubbles off the heater, or stir the water a bit.

If you slide the light closer to the tank or further away, the image of the heater expands or shrinks.

Turn the heater off and feel the glass of the tank. If the top of the tank is warmer than the bottom of the tank, pull on the ring and try to mix the warm surface water with the cooler water. Watch the patterns on the screen. Mixing water is harder than you might think.

What's going on

Water, like air, expands as it gets warmer, taking up more space with the same weight of water. Because warm water is less dense than cold water, warm water rises. In this exhibit, the metal heater warms the water right around it. As the warm water rises through the cooler water, the friction of water rubbing on water causes turbulence.

Because warm water and cold water have different densities, light bends when it passes from one to the other. The meeting of warm and cold water sculpts the lenses that constantly change shape as the water swirls. Like all lenses, these water lenses bend light, moving it from one place to another and making parts of the screen brighter and parts darker.

Related Exploratorium Exhibits

Shadows

Shadow Box; Colored Shadows; Sun Dial; Professor Pulfrich's Universe; Sophisticated Shadows; Does Your Back Curve?; Blood Vessels of the Eye; Convection Currents; Suspense; Air Reed; Polaroid Projector; Recollections.

Refraction

Disappearing Glass Rods; Bathroom Window Optics; Cow's Eye Dissection; Critical Angle; Conversation Piece; Glass Bead Rainbow; Multiple Lens Box; Rainbow Edges in Your Eye; Rainbow Encounters; Sun Painting; Water Waves; Color Removal; Light Island; Image Relay; Image Quality; Laser Demonstration; Air Reed; Rotating Light; Low Frequency Light; Giant Lens.

Heat Conduction

Cold Metal; Heat Loss; Heated Model House; Very Hot, Small Sparks.

Curie Point

Description

Materials lose their magnetic properties when heated past a certain temperature called the "Curie point." In this exhibit a large magnet attracts a U-shaped piece of metal at the end of a pendulum. A current passed through the metal heats it until its Curie point is reached, at which moment the pendulum swings away and hangs free of the magnet until the metal "U" cools off. The visitor can hold the heating current on or off by pushing buttons on the exhibit, and can also pull on a cord tied to the pendulum and feel the magnetic force diminish as the Curie point is reached.

Construction

The heart of this exhibit is the U-shaped piece of stainless steel. It is alloy #430, .025" thick, and has a Curie point of about 1150 degrees F. We get ours from:

Precision Specialty Metals, Inc.
21075 Alexander Court
Hayward, CA 94545
telephone: (415) 786-1119

Cut the metal into the shape shown in the diagram. Notice that the "U" is wider at the top—this focuses more heat towards the bottom, where it does the most good (and the least harm—see below).

The stainless steel "U" is mounted with porcelain insulators on a 29" aluminum bar pendulum, which pivots on a standard door hinge attached to a steel support. The "U" is mounted 6" above the table, its bottom at an even height with the magnet pole-piece. The bottom of the pendulum extends below the "U", almost to the top of the table; an aluminum stop mounted on the table top keeps it from swinging all the way into the magnet (which would cause unnecessary wear on the "U" and would heat up the magnet).

Near the pivot of the pendulum we've mounted a mercury switch that controls the current to the "U" (with another relay) when no one is pushing the buttons. It is set so that the heat is switched on when the "U" swings up towards the magnet; when the "U" reaches the Curie point and falls away from the magnet, the switch shuts the heat off, and the cycle

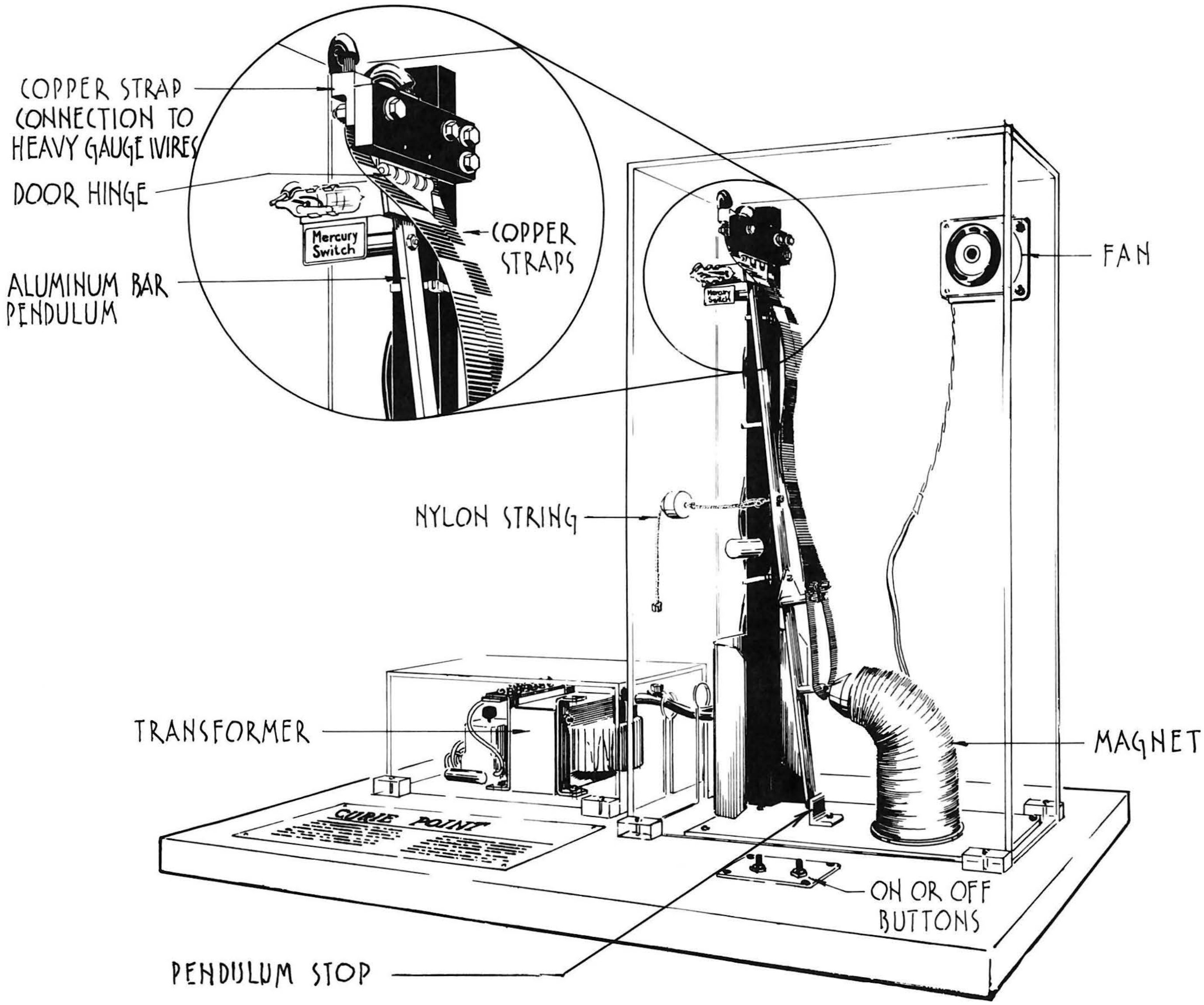
COPPER STRAP
CONNECTION TO
HEAVY GAUGE WIRES
DOOR HINGE
Mercury
Switch
COPPER
STRAPS
ALUMINUM BAR
PENDULUM
FAN
NYLON STRING
TRANSFORMER
MAGNET
CURIE POINT
ON OR OFF
BUTTONS
PENDULUM STOP

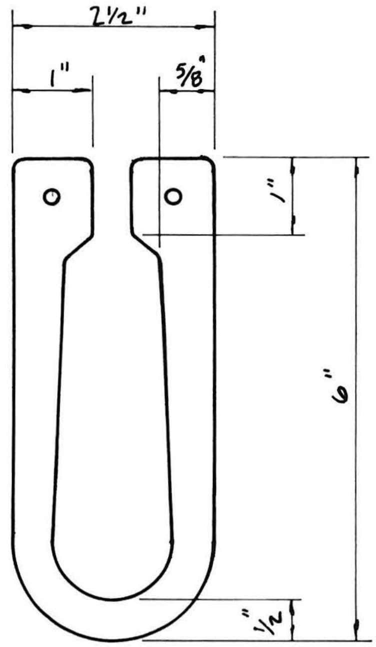

Heating Element

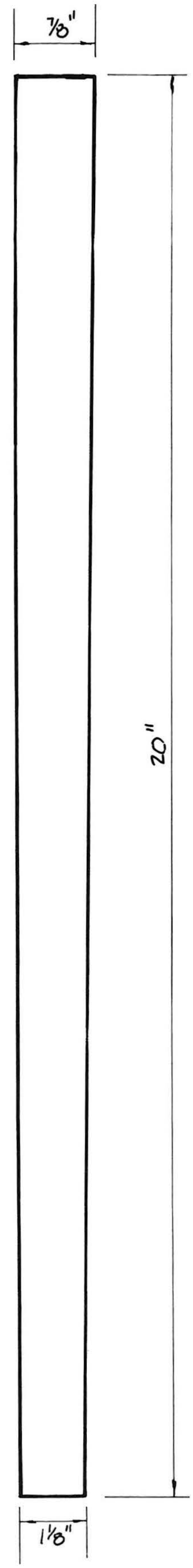

Copper Straps

starts over again. The exhibit is therefore always in motion and draws attention to itself. The mercury switch is easy to adjust by hand; we had to put a time-delay relay on it because the mercury jiggled so much it destroyed the current-controlling relay in short order.

The U-shaped heating element is connected with copper straps (.015x1'') to the top of the pendulum where #4 gauge welding cable wires lead to the power transformer. Our transformer is capable of supplying 100 amps at 6 volts. Below are the numbers on the transformer (though I don't know what they mean—sorry):

RCA 8180079-501
TF5RX0122
60 C.P.S. (Obviously a 60Hz transformer)

As the heating element ages, it oxidizes and its resistance increases. We've put a variac (enclosed in a box and mounted under the table) on the input to the transformer. The variac, which can be adjusted with pliers through a hole in its wooden enclosure, lets us compensate for oxidation of the heating element and also for deteriorating connections. It is turned up until the heating element glows a deep red color. Poor connections are a problem because the continual heating and cooling tends to loosen connections; they should periodically be taken apart, checked, and cleaned. Note that the copper-to-''U'' contacts are the most maintenance prone. You need a large area of contact here, so use washers.

We use one pole of a war surplus radar magnet. Originally we allowed the ''U'' to actually touch the magnet, so we added a blunt chisel-shaped pole-piece to the magnet to reduce the area of contact, so it wouldn't heat up so much. Now that we have a mechanical stop built in (see above) the pole piece is unnecessary.

The pendulum and magnet are enclosed in a plexiglas case. This case must be fan ventilated because of the large amount of heat generated. We've mounted a 27 cfm muffin fan to the upper rear of the case; air enters

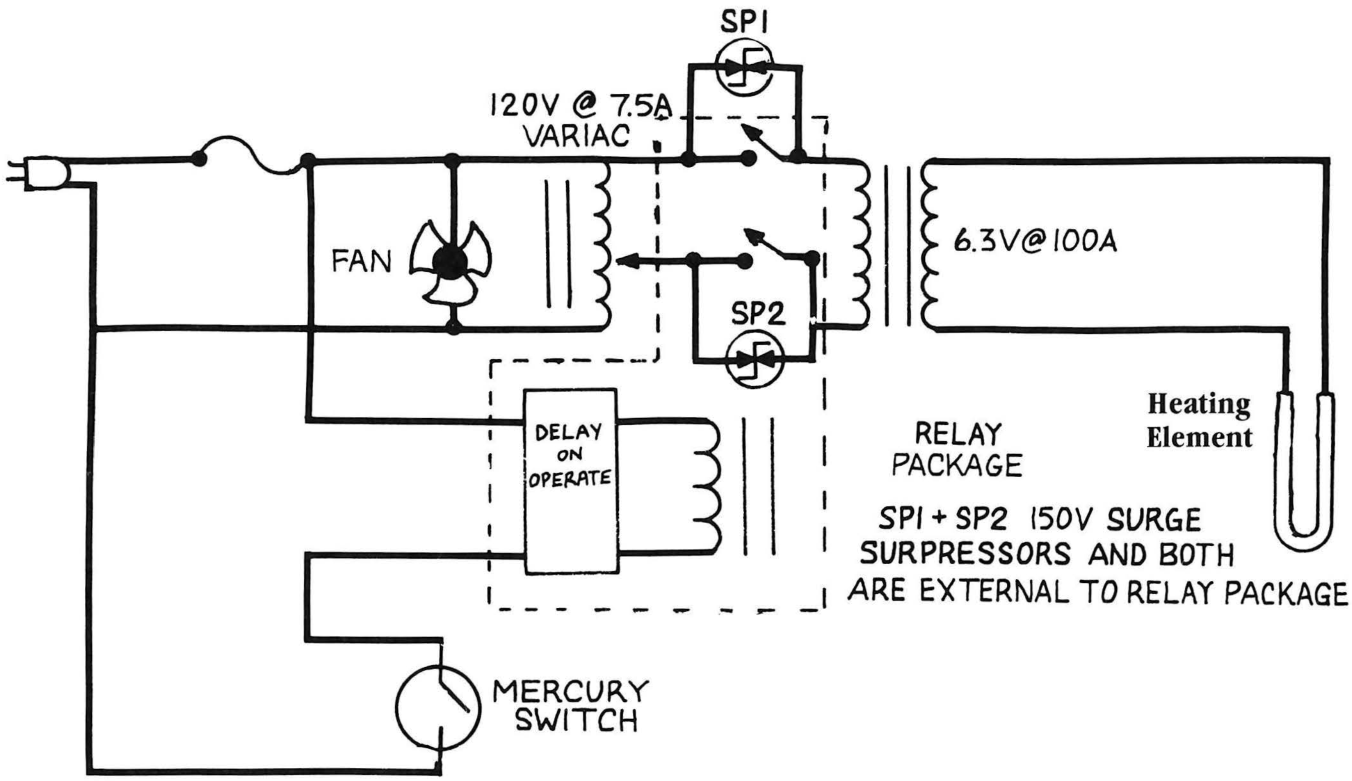

through the cable slot at the bottom. We've installed a sheet metal baffle to keep air from blowing directly on the "U". The main transformer is also mounted on the table top in a separate plexi case.

To let people feel the magnetism "go away", we tied a nylon string to the pendulum; it runs through a nylon bushing in the plexi case and attaches to a small nylon pull.

Exploratorium Exhibit Graphics

CURIE POINT

When steel gets too hot, it is no longer attracted by a magnet.

To do and notice:

- Notice that the heated steel strip is attracted to the magnet until the steel reaches the temperature at which it glows orange hot (1100 degrees F).
- Notice the mercury switch at the top of the swinging bar. When the bar falls away from the magnet, this switch turns off the heating current, giving the steel strip a chance to cool.
- You can hold the heating current on or off by pushing the marked buttons. Pull the bar aside with the attached string to feel how strongly the steel strip is attracted by the magnet.

What is going on:

The magnet can only attract the steel strip by *magnetizing* the strip--that is, by making the strip itself into a magnet. But when the steel is too hot, it cannot be magnetized. The magnet cannot attract this hot steel strip until it cools down enough to be magnetized.

Steel is mostly made of atoms of iron. These atoms act like tiny magnets, each one having a north and south pole of its own. The iron atoms in a piece of steel usually point in all different directions, and so the steel has no net magnetic field. But when you hold a magnet up to a piece of steel, the magnet makes the magnetic iron atoms in the steel line up. These lined-up atomic magnets combine to create a magnetic field in the steel; the steel is now magnetized, and is attracted to the original magnet.

Heat can disturb this process of magnetization. Heat energy makes the iron atoms jiggle back and forth, disturbing their magnetic alignment. When the heat becomes too great, the atoms can't line up at all, making it impossible for the iron to become a magnet. The temperature at which this occurs is called the *Curie point*, after Pierre Curie, its discoverer.

Related Exploratorium Exhibits

Temperature, Effects of

Cool Hot Rod; Fog Chamber; Glass Bicycle Pump; Heat Loss; Short Circuit; Stored Light; Heated Model House; Rumford's Very Dull Drill; Hot Effects; Convection Currents; Color Temperatures.

Heat, Nature of

Heat Pump; Heat Rays & Light Rays; Very Hot Small Sparks; Low Frequency Light.

Randomness

Molecular Buffeting—Real & Model; Random Dot Stereograms; Strange Attractor; Avalanche; Traffic Illusion; Chaotic Pendulum.

Magnetic Fields & Forces

Magnetic Tribbles; Stripped Down Motor; Transformer; Pedal Generator; Ring Toss; Automotive Engine; Eddy Currents; Slow Motion Switch; Magnetic Lines of Force; Magnetic Suction; Motor Effect; Strange Attractor; Daisy Dyno; Hysteresis Motor; Sand Sorter; Black Sand; Visible Magnetic Domains; Giant Meter; Suspense; Electric Pendulum; Shaded Pole Motor I & II.

Hot & Cold

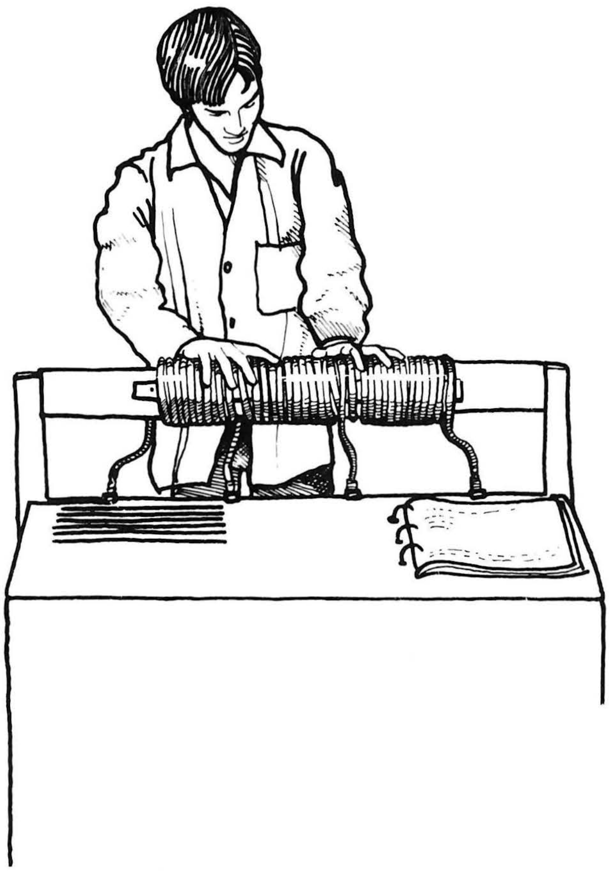

Description

We're all used to optical illusions, but tactile illusions are not so common. This exhibit is designed to fool one's sense of hot and cold. The visitor places a hand on one of three sets of copper coils. One set of coils is cold, another is warm, while the third alternates warm and cold coils.

The all warm or all cold coils feel as expected, but the mixed set feels very hot. This is because two different kinds of nerve cells are being triggered. One set lets you know if you've touched an extreme temperature (hot or cold), while the other tells you if what you've touched is warm or cool. By touching a very cold and a warm coil, the mixed signals sent to your brain tell you "very" + "warm" adds up to "hot."

Construction

We built our exhibit out of a surplus water chiller. Since it has both hot (waste heat) and cool sides, we had the clever idea of making a system exclusively of parts from this chiller. This turned out to be more difficult than we thought. Our system is described below, but be sure to read the Critique and Speculation section before you attempt this one.

A warm and a cold copper tube (1/4" tubing, 3/8" OD) are wound around a horizontal 2x4, one from each end. We wound ten loops of each tube to form the warm and cold sections on the ends; we then interleaved six turns of each at the middle to form a "cold-hot-cold" section of twelve turns. These two tubes are connected with standard pipe fittings to the plumbing in the plywood covered cooling chamber.

In our system the two reservoirs, warm and cold, share the same tank, with a stainless steel partition dividing them. Since this is an open system, it has to be refilled occasionally to compensate for water loss from evaporation. Pumps (Teel model 1P504) in both reservoirs move the water through the system. Note that float switches on these pumps are not necessary, but can be used to shut the system down if the water level falls too low.

Because we use only a water chiller in our system, the heat flow and temperature control are somewhat complicated. A thermostat measures

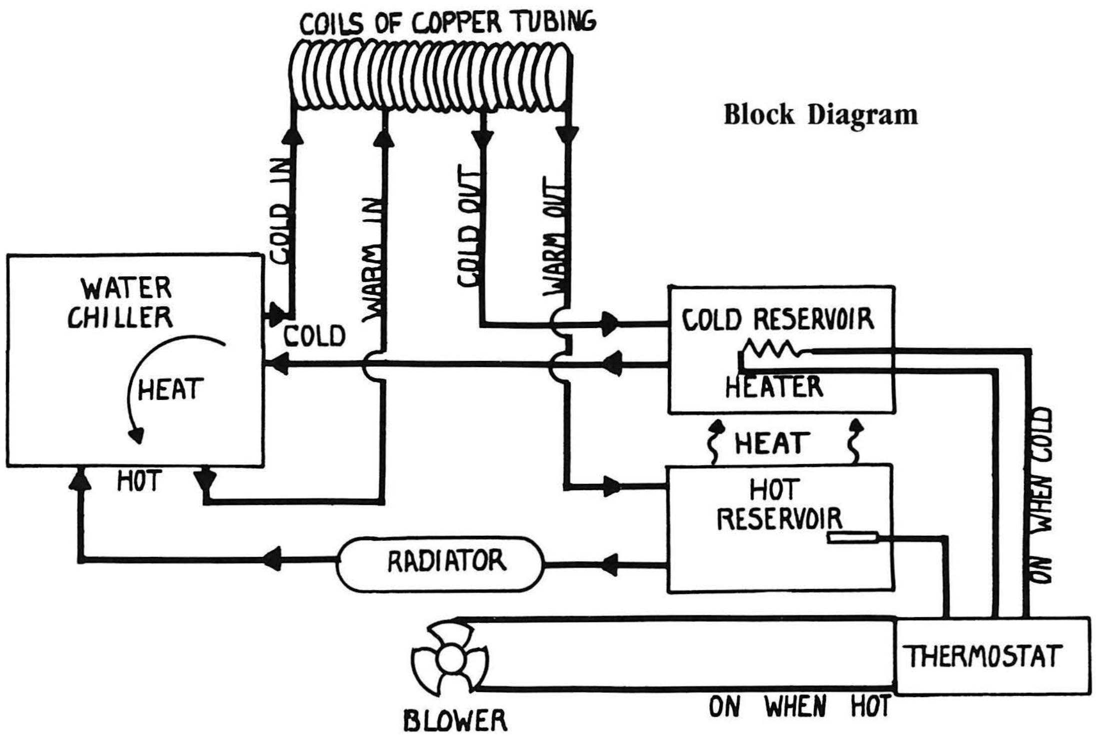

Block Diagram

the temperature in the hot reservoir. Excessive heat activates a blower that cools a radiator through which the water of the hot circuit flows. When the temperature in this circuit drops to a set limit, the thermostat turns on a heater in the cold reservoir; the water chiller transfers this heat into the hot reservoir. In addition, heat from the hot reservoir flows across the stainless steel barrier between the tanks into the cold reservoir. It may seem crazy to heat the cold water to make the hot water hot, but remember that we are using a heat pump in this exhibit. Without any heat input the cold side would eventually freeze up and stop transferring heat to the hot side. This is the reason the seemingly inefficient ''heat loss'' is built into this system.

The temperatures of the water in our exhibit are 58 degrees F on the cold side and 92 degrees F on the hot side.

Critique and Speculation

We believe that it would be easier to build this exhibit as two closed systems, one hot and one cold. Both would run independently and be thermostatically controlled. A water chiller (without the heater and separate reservoirs)—from any commercial refrigeration unit—would be used for the cold circuit. The hot side could be a reservoir, heater and thermostat. We believe the maintenance on these closed systems would be quite low.

Related Exploratorium Exhibits

Perception of Temperature
Cold Metal; Hot or Cold Chimneys.

Information Processing & Encoding
Binary into Decimal; Enchanted Tree; Game of Life; Phosphenes; Albert; Blind Spot; Colorizer; Faces or Vases; Lincoln Pictures; Line by Line; Motion Detector; Muscle Stretch; Watchful Grasshopper; Circular Deformation; Does your Back Curve?; Drum; Holes in a Wall; Traffic Illusion; Triple-Aye Light Stick; Two Ways to Look at Sound; Reaction Time; Spark Chamber; Air Pump; Discernibility/Going to Pieces; Shimmer; Another Way of Seeing; Blood Vessels of the Eye; Inferno; Benham's Disc; Reach for It; Recollections.

Sensory Motor Coordination
Aplysia Tank; Reaction Time; Sinners; Balancing Stick.

Hot & Cold

Your brain can combine conflicting messages to jump to a startling conclusion.

To do and notice

Press the palm of your hand on the center section of the copper tubing. Notice that the coils feel hot.

Touch the outer sections of the copper tubing. Notice that one is warm and the other is very cold. The warm coil has a temperature of about 92°F while the cold coil has a temperature of about 58°F.

Touch one coil at a time in the center section, and notice that the coils alternate warm and cold.

Try touching your forehead, the back of your hand, and the inside of your forearm to the center section of the tubing. You may notice that the sensation of heat is more intense or less intense. Sensory nerve cells are more densely packed in some parts of your skin than others, and these dense patches are more sensitive.

What's going on

There are two types of temperature-sensing cells or receptors in your hand. Some temperature receptors respond only to extreme hot or cold. Other receptors respond only to mildly warm temperatures in the range of ten degrees above or below body temperature. When you touch the center section of the coils, both kinds of receptors are stimulated. Some nerve cells tell your brain that the temperature is extreme, while other nerve cells tell your brain that the temperature is warm. If your brain receives these two messages from receptors that are close to each other, it adds these messages up and gets extreme warmth or hot.

There are thousands of nerve endings in your skin. Although little is known as to the exact function of each nerve ending, it is thought that there are touch, pain, pressure, and two types of temperature-sensing cells.

Skillets

Description

Different types of skillets have different thermal properties, depending on what they're made of. Each of the four frying pans in this exhibit has heat-sensitive liquid crystal material on its bottom. When the visitor places the skillet on a heating element, the liquid crystal changes color. Some skillets take longer to heat, and some spread the heat more evenly than others.

Construction

There are four different skillets in this exhibit:

1) Cast iron
2) Aluminum
3) Stainless steel
4) Copper clad stainless steel (''Revereware'')

Each of the skillets has a bottom diameter of 8''. Because the liquid crystal material is fairly delicate, we protect it with a plexiglas cover inset about 1'' above the bottom. The cover may be fixed in place with screws through the side of the skillet and into the edge of the plexi, or by gluing it with a bead of silicone sealant. Heat tends to build up beneath the covers, so we've vented them by cutting a 3'' long chunk from the bottom corner of the skillet, which also serves to reveal the thickness of the material and the structure of the copper clad skillet. The liquid crystal material is available from:

Liquid Crystal Technology
Hallcrest Products, Inc.
1820 Pickwick
Glenview, IL 60025
telephone: (312) 998-8580

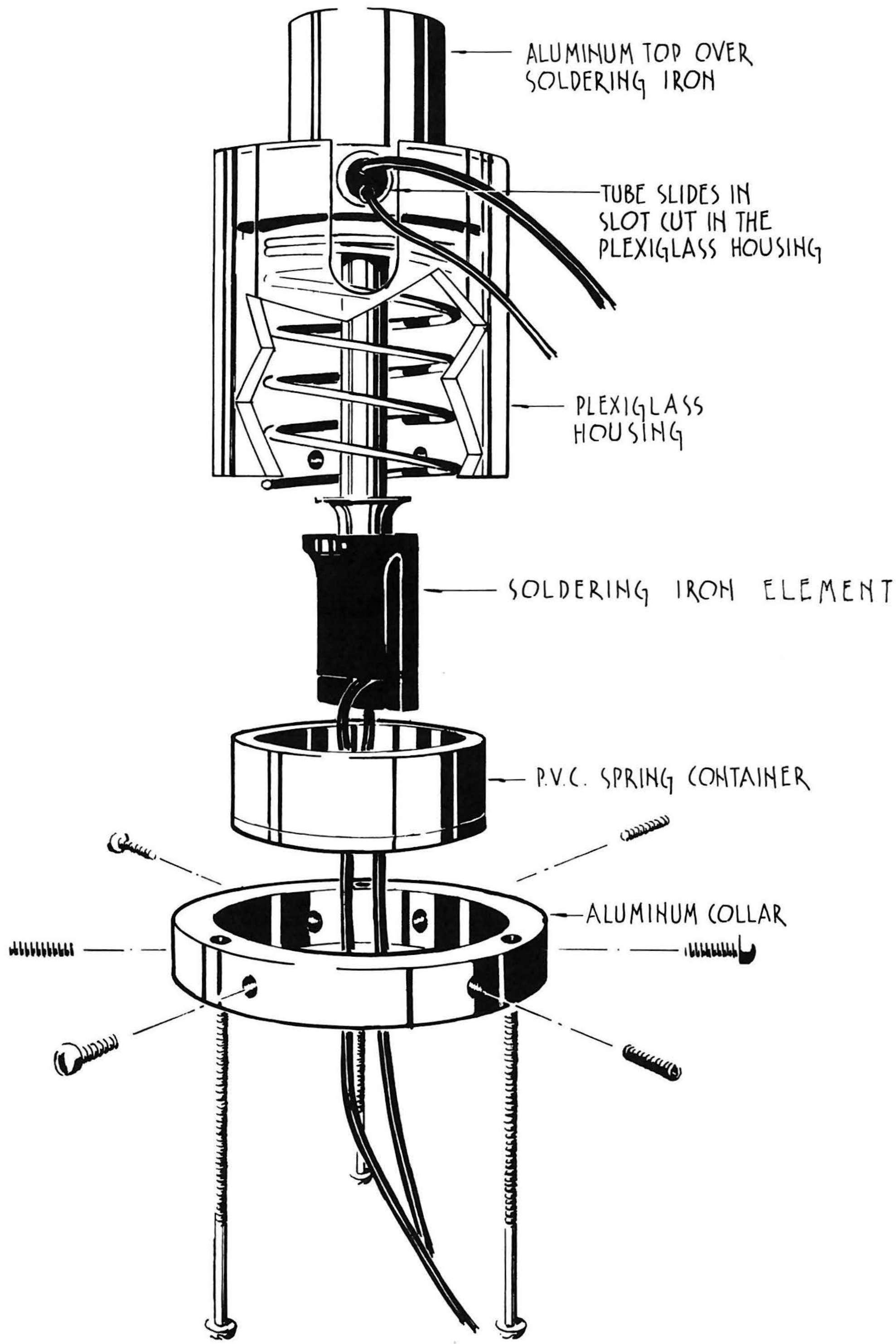

Exploded Detail of Heater

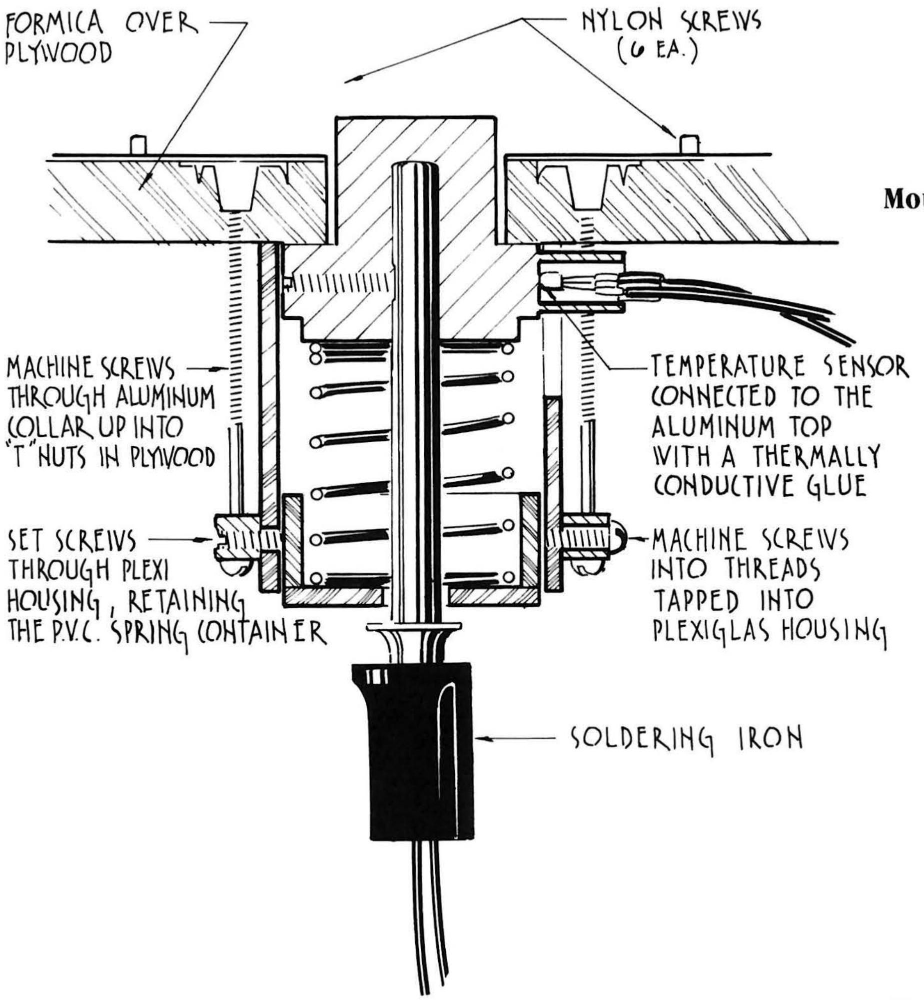

Mounted Heater

The "stove" in this exhibit consists of two electrically heated, spring-loaded cylindrical blocks of aluminum. It is important to have at least two identical heating elements so the visitor can compare at least two skillets at once. The heating elements and control electronics are housed in a box that sits at the back of the table; it is covered with white formica, with red formica circles inset around the heaters. When a skillet is placed on one of the heating elements, its weight depresses the spring-loaded heater until it rests on the heads of six nylon cap screws, which are set around the red circle and provide about 1/8" clearance from the formica (if the skillet rested directly on the formica, the formica would steal some of its heat). The mechanical details of the heating elements can be found in the diagram; the details for the thermostats are in the schematics. The thermostats are set to around 120 degrees F (the liquid crystal changes color around 75 degrees F).

The skillets need a place to cool when removed from the heaters. We've bolted a 1/2" thick, 12" wide aluminum plate across the entire front of the exhibit table to provide a resting place and heat-sink for the skillets. The aluminum plate is big enough to accommodate all four skillets at once.

Critique and Speculation

The liquid crystal has to be replaced if it gets overheated. If you build a series of exhibits that use liquid crystal, it would be nice to have one that explains how it works. (If you do make such an exhibit, let us know—we're not sure how it works ourselves.)

Exploratorium Exhibit Graphics

Heat Conduction

Cold Metal; Heat Loss; Heated Model House; Convection Currents; Very Hot, Small Sparks.

Heat Radiation

Hot Spot; Curie Point; Give and Take; Carbon Filament; Heat Rays & Light Rays; Low Frequency Light.

Atoms and Molecules

Argon Candle; Curie Point; Color Temperatures; Bubbles; Electromagnetic Spectrum; Gas Model I-IV; Heat Loss; Heated Model House; Magnetic Light Sorter; Molecular Buffeting Real & Model; Patterns of Scattered Light; Periodic Table; Visible Magnetic Domains; Glow Wheel; Polaroid Projector; Polaroid Sunglasses; Rotating Light.

Electrical Block Diagram

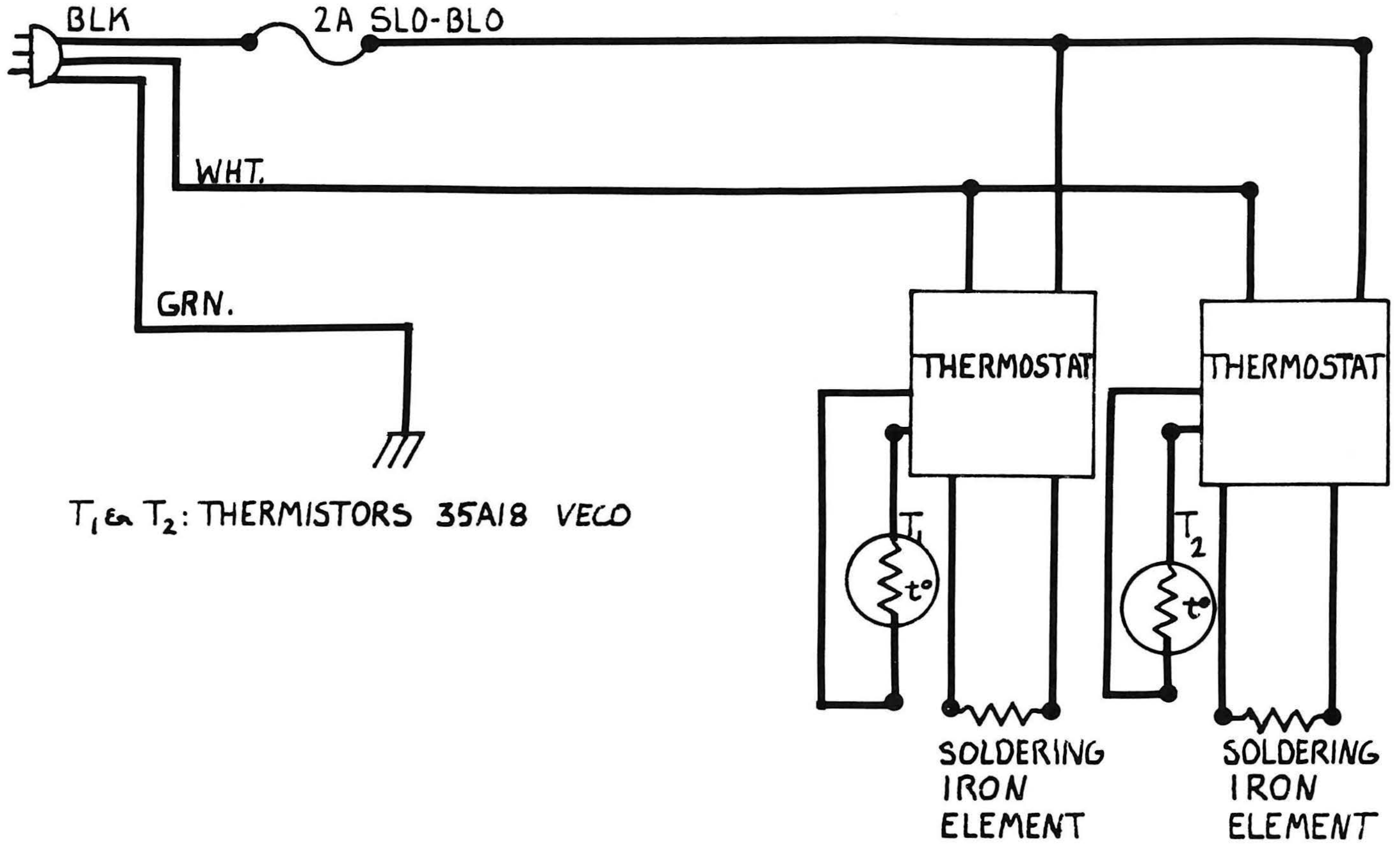

Thermostat Schematic

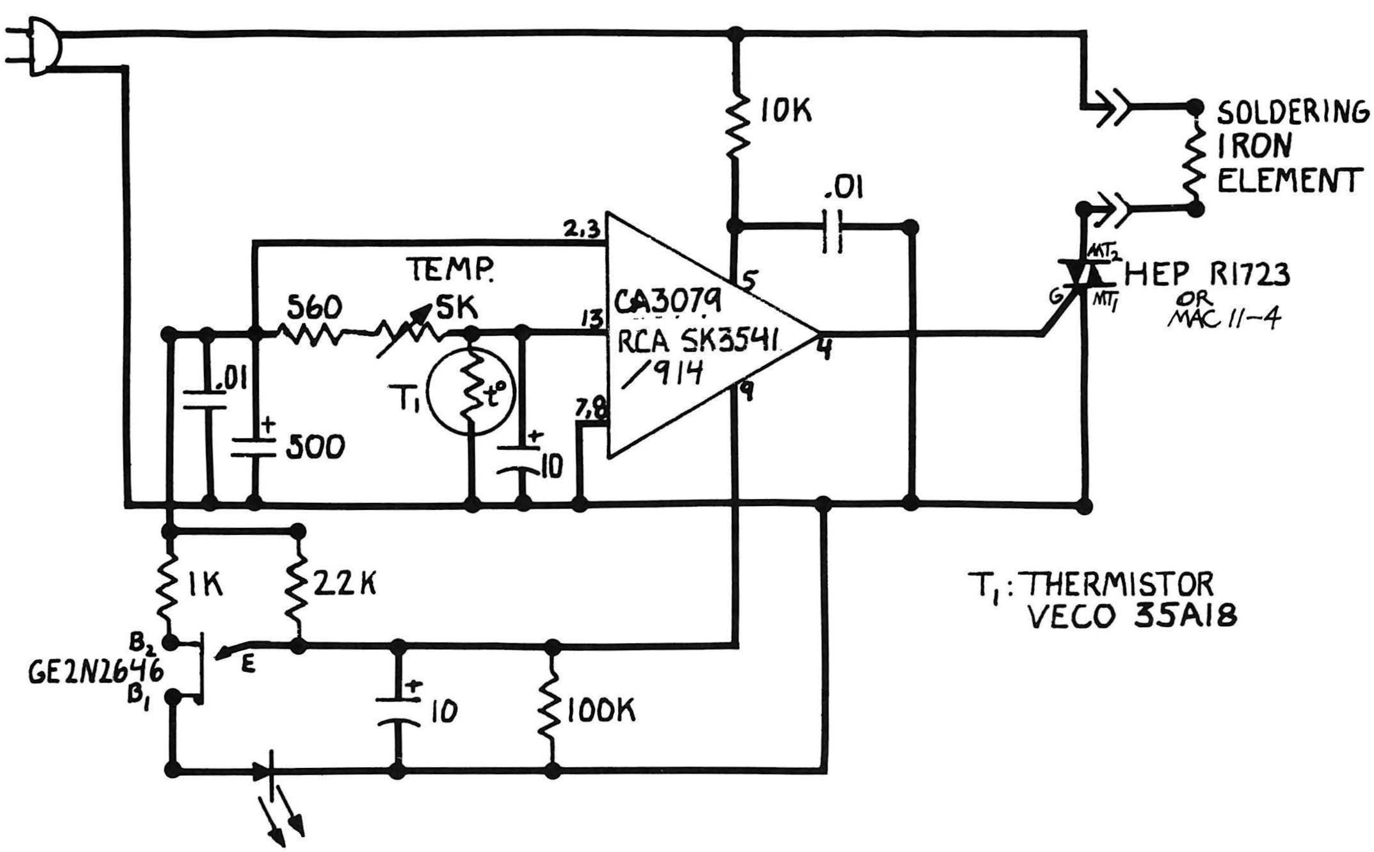

Related Exploratorium Exhibits

Skillets

The different cooking properties of skillets are a result of thermal properties which come from the use of different materials and designs.

To do and notice:

The four skillets are made of different materials (cast iron, stainless steel and aluminum) and different designs. Notice the thickness and construction at the cut-away section of each.

Place the stainless steel and the copperclad stainless steel skillets on the two hot plugs. Notice the color appearing in the temperature sensitive plastic (liquid crystal material) attached to the bottom of the pan. The liquid crystal is black below 75° F, changes from brown to yellow to green to blue as the temperature rises to 85° F, and returns to black above 95° F.

Notice the speed at which the color appears and how rapidly the rainbow ring expands for each pan. Also notice how the width of each ring differs in the two skillets and how the width changes as the ring becomes larger.

Replace the skillets on the aluminum slab and watch the color change as they cool.

Compare other pairs of skillets and notice the differences.

Temperature sensitive liquid crystal material provided by Liquid Crystal Technology, Inc.

What's going on:

Heat enters the skillet bottom where it is in contact with the hot plug. If the metal is a good conductor of thermal energy, the heat spreads out rapidly and the temperature rises slowly near the plug. This is true, for example, for the aluminum skillet: because of its high thermal conductivity, the distance between the blue circle (at about 90° F) and the yellow circle (at about 80° F) of the rainbow is significant. As more heat enters the skillet, the circle grows and the rainbow becomes wider.

If the metal conducts less well, as is true of stainless steel, the entering energy (heat) moves slowly away from the area of contact so that the temperature near the plug rises quickly. The thermal conductivity of stainless steel is only one-fifteenth that of aluminum. In this case the rainbow ring appears promptly but is very narrow; the effect of the heat from the hot plug is only weakly felt away from the contact area. The ring expands as heating continues but it expands more slowly than it does in the aluminum pan. Material of high thermal conductivity is better for cooking because it provides an even temperature across the bottom of the pan. This is particularly important if the source of heat from the stove is not uniformly distributed.

The copperclad skillet has a very thin layer of copper, a material with very high thermal conductivity, bonded to stainless steel, which has considerable strength, is easy to clean, and is chemically inert. The conductivity of these bonded metals is closer to that of aluminum than to that of steel.

Cast iron has a thermal conductivity which is also between that of unclad steel and that of aluminum. The heat flow in the cast iron skillet is made easier because of its greater thickness. The greater mass, however, means that more energy, and hence more time, is required to raise the temperature of the skillet. This same property also makes the temperature of the skillet less sensitive to the addition of food or water. A raw egg can cool the aluminum skillet noticeably but has little effect upon the temperature of a cast iron fry pan.

Water Freezer

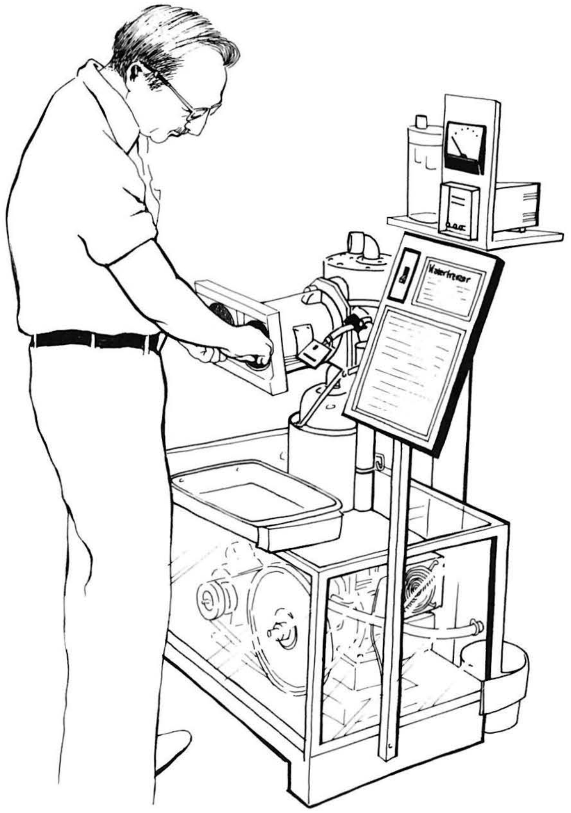

Description

This exhibit demonstrates that evaporation is a cooling process. A small amount of water is squirted into an evacuated chamber. Because there is no air pressure on the liquid, evaporation takes place at a very high rate—sometimes the water will even boil at room temperature! Since only the faster molecules escape while the slower ones are left behind, the liquid cools. After about a minute, the water begins to freeze over. It is quite something to see water boiling and freezing at the same time.

Construction

Water Freezer is quite complicated and should only be attempted by people who have experience with vacuum systems. Since it takes a considerable time investment to learn the ins and outs of vacuum technology, we recommend you amortize this learning expenditure over several vacuum exhibits. The text below assumes some prior knowledge of vacuum systems, so only important hints and general descriptions of components are given.

You will need a pump that works fast and can handle water vapor well. It must achieve a pressure of at least 4mm of mercury, about the vapor pressure of ice. We use and recommend a Kinney KS-13 single stage vacuum pump, which pumps about 13 cubic feet per minute; this speed is necessary to freeze the water reasonably fast. A high efficiency ¾ horsepower motor drives the pump, and can be plugged into any 115 volt outlet. This motor is slightly more expensive but we feel it's worth the investment. Be sure to get the pump with a smoke eliminator, which condenses the fine mist of oil that issues from the pump. This slightly toxic oily mist is usually interpreted as smoke by the public; it also coats all nearby surfaces.

It is important to run the pump 24 hours a day. During the day the pump oil normally becomes cloudy by forming an emulsion with the water. If the pump is shut off at night the oil and water separate and the water can rust the pump parts, whereas if the pump is left running all

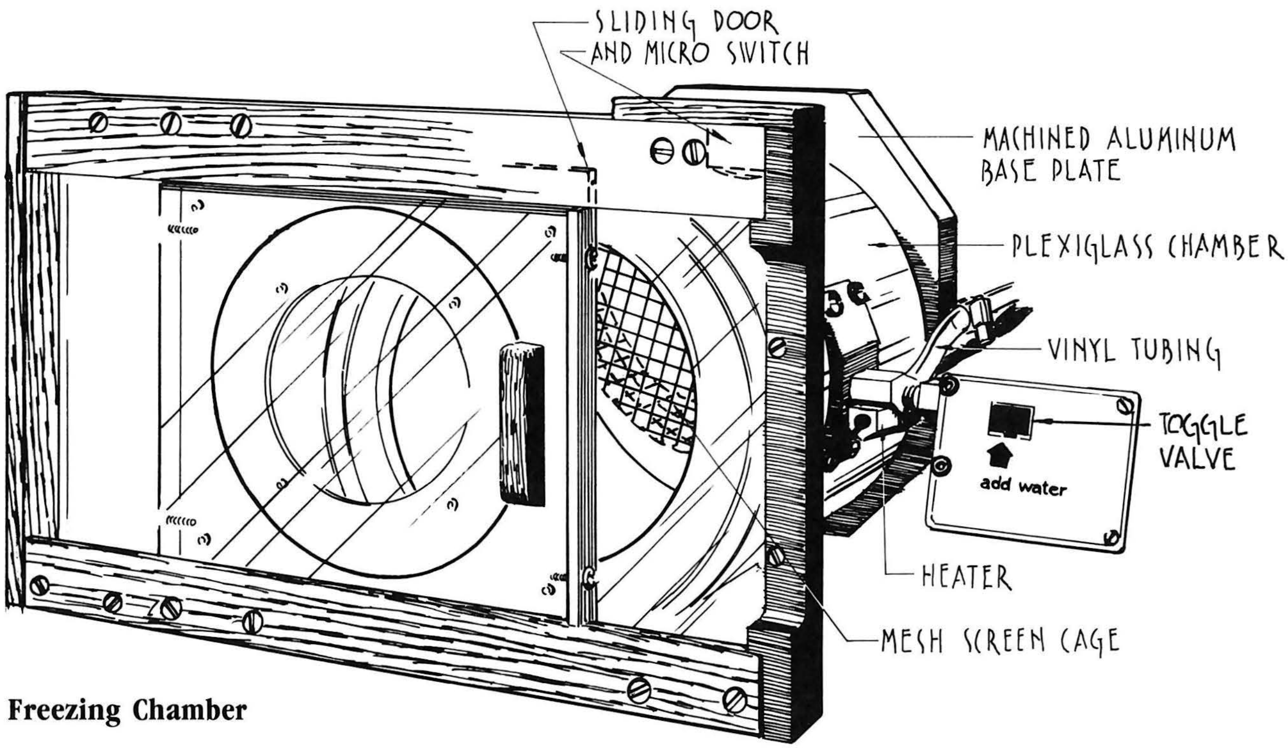

Freezing Chamber

the time the water eventually evaporates and is exhausted from the system without any rusting. We have also installed a sight glass in the bottom of the oil reservoir; water, which is heavier than oil, settles down into the sight glass, and can be drained from it via a small valve. There's a "vent" tube inside the drain tube that leads to the sight glass; this second coaxial tube protrudes up into the oil tank and expedites the movement of water into the glass by "venting" the oil that starts out in the glass back up into the tank as the water collects. We leave the ballast valve on the pump OPEN. We have also added a vacuum switch to the oil line on the pump to shut things down if the oil flow is lost. Because we don't need to reach a high vacuum, we use Shell turbo 68 oil—it is MUCH cheaper than mechanical vacuum pump oil.

The vacuum pump is attached to the evaporation chamber with regular water pipe put together with teflon tape. By putting together various combinations of 90 degree and 45 degree elbows you can position the chamber any way you like. In line with the chamber is a motorized ball valve to "turn the vacuum on and off;" ours is a Model B31 made by Worcester Controls, West Boylston, MA. The chamber has a machined aluminum base plate onto which are attached the vacuum line, a vacuum gauge line, the vent line, and a window for an illuminating lamp (automotive tail-lamp). We have put a 1/4" mesh screen cage over the holes in this plate to keep foreign matter out of the vacuum pump.

The plexiglas chamber fits over a shoulder on the base plate and is sealed with an O-ring set into the circumference of the shoulder. The other end of the plexiglas chamber is cemented to a flat sheet of 1/2" plexi with

a hole for access to the chamber. The door assembly is built onto this flat sheet. The door—which is simply another flat piece of 3/8'' plexi with an O-ring seal set into it—slides in a wooden frame attached to the end of the chamber. It is interesting to note that although the door has lots of play in its slider (at least 1/16''), it seals very reliably. A microswitch recessed into the door frame tells the exhibit logic if the door is open or closed. The chamber is tilted so that excess water will spill out when the door is open.

Water is let into the chamber through a small toggle valve on the side of the chamber, and will only flow when the chamber is evacuated. To keep people from adding too much water a needle valve is inserted in series with the toggle valve with a short section of vinyl tubing in between. The tubing acts as a reservoir which the needle valve is adjusted to fill at an appropriate rate. Since the water valve is so close to the vacuum, the water can easily freeze and clog the the inlet. We've solved this by attaching a small resistance heater to the toggle valve and adjusting its temperature with a variac to keep the valve warm (not hot!). Water is held in a 2 liter plexi tank above the chamber. We use an in-line automotive fuel filter to remove dirt and dust from the water before it gets to the chamber.

Several layers of black felt applied to the outside bottom of the chamber provide insulation to help shorten the freezing time; the dark background also increases the visibility of the freezing process.

The exhibit produces ice litter. We've placed a stainless steel photographic tray on the exhibit underneath the chamber. The tray drains into a waste water can; we'd prefer a floor drain.

The exhibit logic is fairly tricky but can easily be built with simple relays. The logic must insure that the user can not pull a vacuum when the door is open. This seems simple but the public is extremely clever. If the switch is thrown to ''vacuum'' and the chamber door is quickly opened, the ball valve will be caught in either an open or partially open state. This is an especially serious problem if the door gets stuck slightly open with a partial vacuum and you can't close it to activate the valve back to ''air''. To take care of this problem, we hooked up the relays to cycle the ball valve all the way around back to ''air'' in this situation. (We had to put an additional microswitch in the valve to accomplish this.) Another solution to this problem would be to buy a reversible ball valve (ours has an AC motor on it).

Since the exhibit runs 24 hours a day, we have broken the power into two cords, so that the exhibit lights and some logic can be shut at night. The logic is designed so that when the ''day'' power is shut down, the ball valve cycles to ''air'' and blocks off the chamber. This prevents the pump from sucking water out of the chamber all night, since that's the time when it's supposed to be getting rid of its accumulated load of water. The pump shakes a lot and it's important to keep the exhibit sitting solidly on the floor. We put leveling feet at all four corners of the exhibit housing. The pump and logic are housed in a rectangular base with plexiglas sides—we believe people should be able to see all the associated machinery. Too many museum exhibits are run magically by invisible machines. Let those guts hang out!

Critique and Speculation

Try to find a reversible ball valve. It will make your logic much easier to build. This exhibit requires surprisingly little maintenance, but it is maintenance that MUST be done. The oil level should be checked frequently and we have found that the oil must be changed about every 6 months. If you want to build another exhibit using the same pump as this one see the ''Falling Feather'' recipe in this cookbook.

Exploratorium Exhibit Graphics

Water Freezer

The freezing of water in this exhibit depends on two factors: water cools when it evaporates, and water evaporates more rapidly when one pumps away the air and water vapor.

The plastic cylinder can be connected to a vacuum pump.

To do and notice:

Close the door in front if it is open.

Move the switch to "VACUUM". The valve will open and allow the pump to start pumping out the chamber. Watch the vacuum gage.

Add a little water with the valve marked "WATER". In about 30 seconds the water will begin to freeze.

Move the switch to "AIR" and wait for the air to reenter the chamber. Watch the vacuum gauge.

Now you can open the door and remove the ice. (Note: Water will not come into the chamber unless there is a vacuum in the chamber.)

What is going on:

Water cools off when it evaporates because only the fastest (or hottest) molecules have enough energy to pull away from the water surface (water molecules tend to stick together). When the "hot" molecules leave, the slower (colder) ones are left behind. If enough hot molecules leave fast enough the water becomes cold enough to freeze.

If you have water in a corked bottle, the water doesn't evaporate because as many molecules are coming to the surface as are leaving it. If you wet your finger and hold it in the wind, your finger will feel cold on the side where the wind hits it because the evaporation is faster where the wind carries away the evaporated water molecules. Without the wind many of the evaporated molecules are not carried away but come back to your finger.

By pumping out the water vapor in this exhibit one can remove all the evaporated molecules more effectively than by blowing them away.

Related Exploratorium Exhibits

Change of State
Water Boiler; Brownian Motion Model.

Sound, Waves and Resonance

Whenever you hear a sound, something is vibrating, making waves in the air. You can't always see the movement of the object making the sound, but you can sometimes feel the vibrations it makes. Sound is the result of a chain of events. At the *Bells* exhibit, someone scrapes a metal plate with a bow, causing the plate to quiver; this vibration pushes against the air, which in turn vibrates on your eardrum and you hear the many tones of the vibrating metal. At this exhibit you can also see that the entire plate doesn't vibrate—sand collects in the spots where there is little or no vibration.

Exhibits in this section explore many different aspects of sound and waves. There are several exhibits on frequency and pitch. The faster something vibrates, the higher its pitch. Short, thin, tight things tend to vibrate faster and thus make higher tones than long, thick, loose things. At *Pipes of Pan* you can hear only high sounds in the short tubes and low sounds in the long tubes. The length of the tube amplifies some sounds and cancels others through the process of resonance. With the *Organ Pipe* you can change the length of the tube to see which sounds resonate at the different lengths. Other exhibits in this section let you play with the way sound travels in the air. *Conversation Piece* demonstrates that sound waves, like light waves, can be focused with a lens—the lens in this case is a large balloon filled with carbon dioxide.

Sound, Waves and Resonance Exhibits in Cookbooks I, II, and III:

Conversation Piece

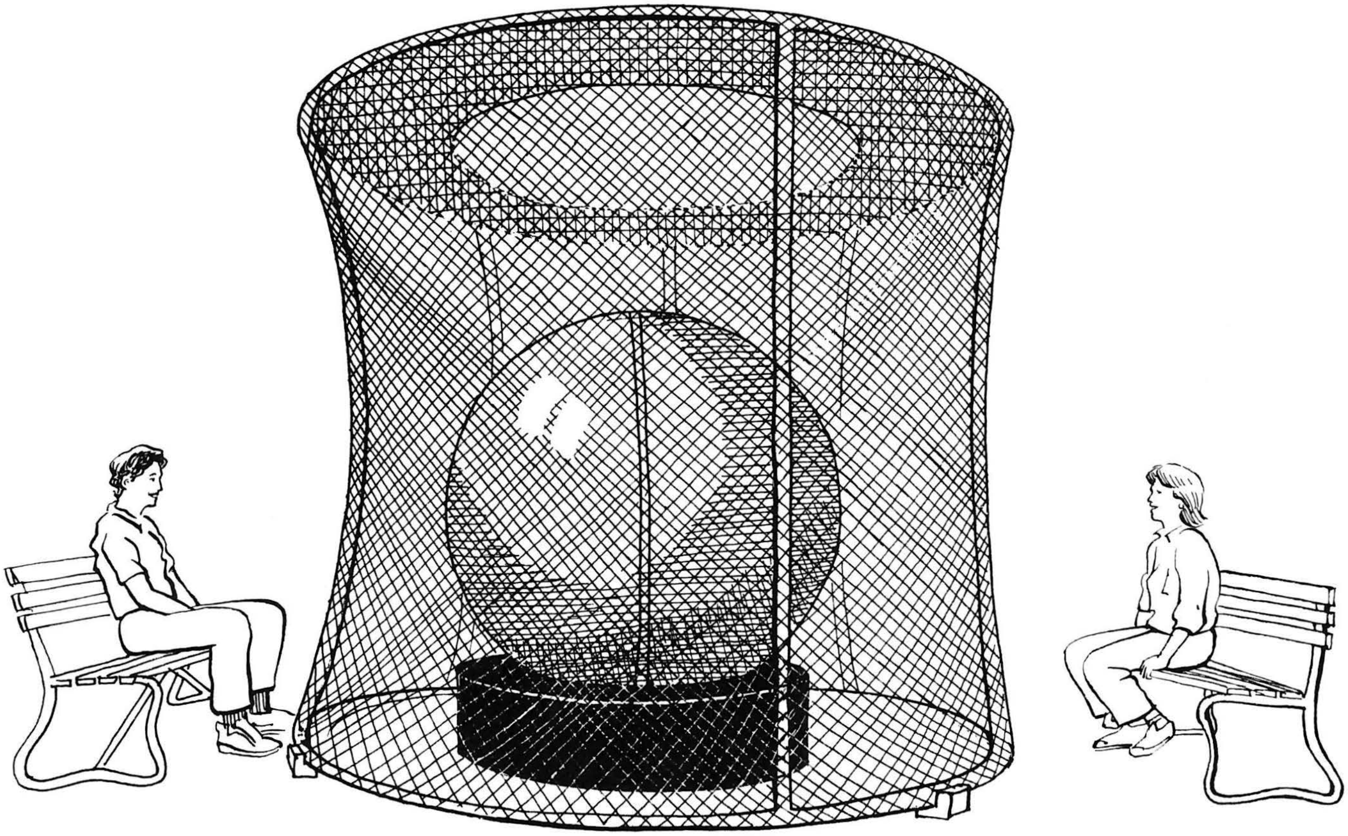

Description

Two people sit on opposite sides of a 6 foot diameter balloon filled with carbon dioxide gas. When they speak, they can hear each other very clearly because the sound is focused by the gas—which is denser than air—in the same way that light is focused by a glass lens. One can also sit closer to the balloon and hear sounds from further away.

Construction

We use 8 foot weather balloons (which we inflate to 6 feet) purchased from:

Edmund Scientific
7785 Edscorp Bldg.
Barrington, NJ 08007
Order No. 60,568.

We use two balloons, one inside the other. They must be inflated slowly, with a little jiggling every once in a while to make sure they're nested properly and that the outer one doesn't jam in its resting hole. The balloon sits in a 4 foot diameter circular hole in a cylindrical stand that is 1 foot high and 6 feet in diameter. We have placed 2 small fluorescent fixtures inside the base below the balloon, which illuminate the entire sphere with a pleasant glow.

Since the balloon loses gas, we have an automatic filling system that keeps it at a constant size. The gas bottle and regulator sit outside the exhibit under the table of a related exhibit (Water Sphere Lens). A tube from the output of the regulator is fed through a gas solenoid, which is controlled by a switch connected to one end of a cloth ribbon that extends around the circumference of the balloon. The other end of the ribbon is attached to the balloon stand. When the ribbon is stretched tight by

the inflated balloon, it pulls open the switch and the flow of gas is shut down; when the ribbon loosens, the switch closes and the balloon is filled. The gas hose is slightly larger than the neck of the balloon; the neck is stretched over the hose end, wrapped with silver duct-tape (gaffer's tape), and hose-clamped in place. Carbon dioxide gas and regulators are available from your local gas distributer, who will deliver filled cylinders to your door and pick up empties.

Because the balloon is easy to pop, it is contained in a nylon net cage. The nylon netting is wrapped around a welded steel frame, which is 8-1/2' tall and consists of two 10' diameter horizontal hoops of 1-1/4'' steel pipe and six vertical supports of 1/2 x 1-1/2'' steel. Note that the vertical supports are curved so that the cage has a ''waist'' diameter of 9'. This allows people to get closer to the balloon and hear sounds focused from farther away. Keep in mind that the closer kids can get to the balloon, the more temptation there is to pop it (temptation is inversely proportional to the square of the distance from the balloon!). Nylon rope is threaded through the top and bottom ends of the cylinder of netting, and then drawn tight, so that the net is stretched taught against the frame. We have placed two park benches on opposite sides of the balloon, so people can sit and talk comfortably from an optimum distance. The benches are held in place on our asphalt floor with steel cable and anchor bolts.

Critique and Speculation

The balloon and gas cylinders need changing about once a month, making this a medium-maintenance exhibit. The design of our cage doesn't provide for easy access to the balloon; we have to tip the cage, prop it up on a garbage can, and then crawl under in order to repair the balloon. You can certainly find a better way (maybe put a zipper in the net).

An alternate source of the balloons might be a scientific company specializing in weather forecasting supplies.

Related Exploratorium Exhibits

Refraction

Disappearing Glass Rods; Bathroom Window Optics; Critical Angle; Leyes Photos; Glass Bead Rainbow; Multiple Lens Box; Water Sphere Lens; Water Waves; Image Relay; C the Light; String Analogy; Sun Painting; Convection Currents; Image Quality; Laser Demonstration; Air Reed; Rotating Light; Prism Tree.

Sound Image

Focused Sound; Rotunda; Visible Effects of the Invisible; Speech Dissector; Sound Column.

Sound, Audible Spectrum

Vocal Mirror; Echo Tube; Vocal Vowels; Watch Dog; Voice Trombone; Voice Trace; Pentacord; Aeolian Harp; Sound Sculpture; Bells; Two Ways to Look at Sound; Music Box.

Exploratorium Exhibit Graphics

Conversation Piece

To do and notice

Be seated on a bench facing the balloon. Have a friend sit facing you on the opposite side of the balloon. Make sure you are directly opposite each other. Try talking back and forth. The sound of your friend's voice should be loud. This balloon is filled with carbon dioxide and acts like a lens to focus your voice.

Try listening about two feet from the balloon. You may hear sound from far away places.

What's going on

Sound travels more slowly through heavy carbon dioxide gas than it does through the lighter air. The speed of sound in carbon dioxide is about 4/5 its speed in air. For comparison, the speed of light in water is about 3/4 the speed of light in air.

Giant Guitar String

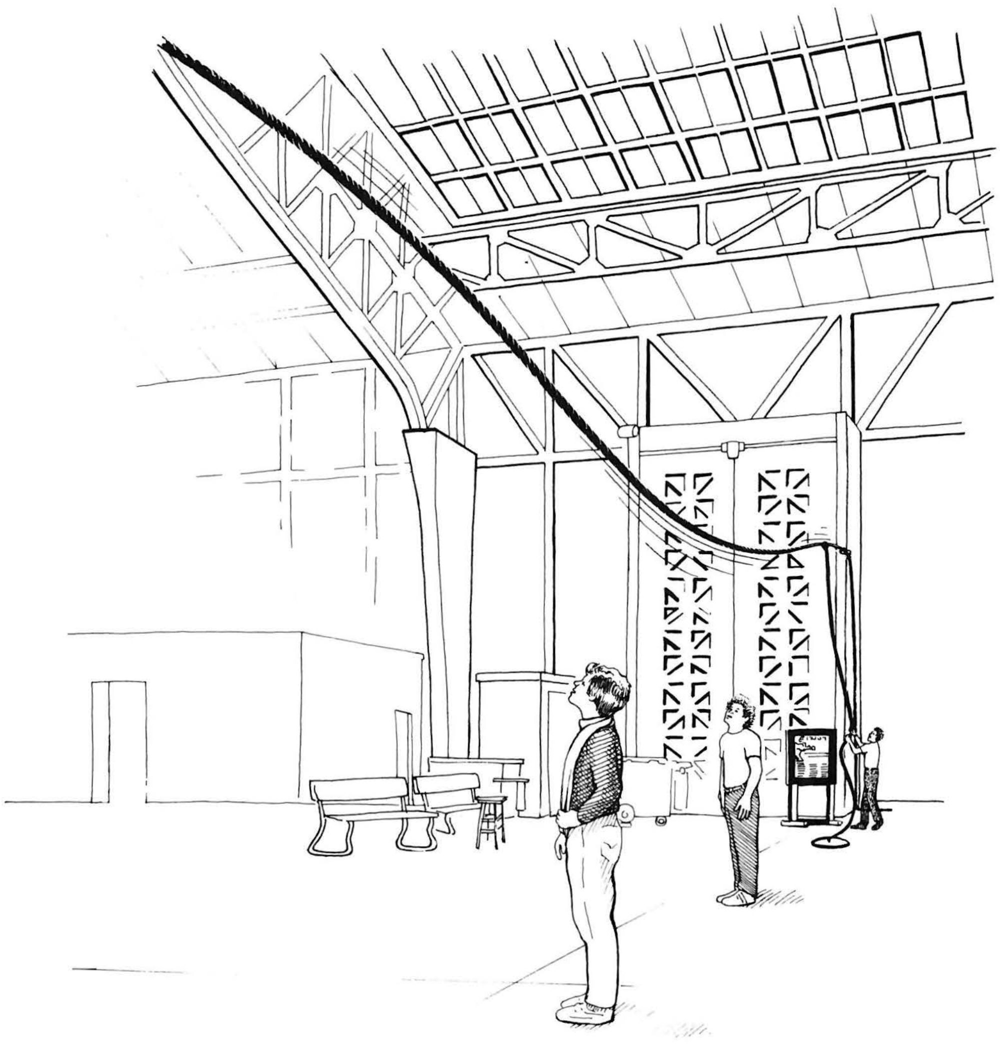

Description

A rope that extends all the way across the museum is suspended high above the floor. Near one end hangs another attached rope that the visitor can pull on, generating wave vibrations in the horizontal rope. The tension in the horizontal rope can also be varied. Depending on the frequency of pull, different resonances occur, and you can see nodes, antinodes, resonance, and 180 degree phase shifts (as the waves reflect off a fixed end of the rope).

Construction

This exhibit actually is as easy to build as it sounds. A 5/8'' diameter nylon rope is used as the ''guitar string''. It has loops braided into each end (you can tie knots if you can't find a sailing enthusiast to braid the loops for you). One end of the rope is tied to the wall, while the other end passes over a pulley and down to a block and tackle, which is used to change the tension in the rope: the rope end attaches to the top block, while the bottom block is anchored to the wall, near the floor; the visitor pulls on a 1/2'' manila hemp rope—that passes around both of these pulleys and draws them together—in order to tighten the big rope. To fix the tension, the 1/2'' rope is held in place in a wall-mounted ''V'' shaped rope clamp available at nautical supply stores.

The rope that the visitor pulls to excite vibrations in the main ''guitar string'' hangs from a piece of steel pipe placed over the main rope. Silver duct tape and hose clamps limit the excursion of the pipe on the rope.

Originally, the sliding pipe was installed so that the visitor could pump energy in at different points. Unfortunately, this hasn't worked well, but we left the pipe on because it's a good way of attaching the "exciting rope" (a very flexible piece of nylon mountain climbing rope).

The end of the exciting rope is tied to an eye bolt in the center of an 18" diameter disk of 3/4" plywood, which sits on the floor; this keeps the bottom end of the exciting rope from wandering around and getting into trouble.

Critique and Speculation

Although our sliding pipe doesn't work well, it is a variable that would be nice to have in this exhibit. If you can figure out a good way to do this, please let us know.

Related Exploratorium Exhibits

Wave Form

Harmonic Series Wheel; Fading Motion; Voice Trace; Visible Effects of the Invisible; Sound Column.

Wave Propagation

Echo Tube; Wave Machine; Longitudinal Wave; Conversation Piece; Piano Strings; Aeolian Harp; Blue Sky.

Wave, Standing

Wave Upon Wave; Pipes of Pan; Resonant Rings; Resonator; Vibrating String; Organ Pipe; Wave Organ; Walking Beats; Kettle Drum; String Analogy; Air Reed.

Harmonics

Aeolian Harp; Guitar String; Bells; Frequency Excluder; Multiplied Glockenspiel; Violin Tone Color; Voice Trombone; Pentachord.

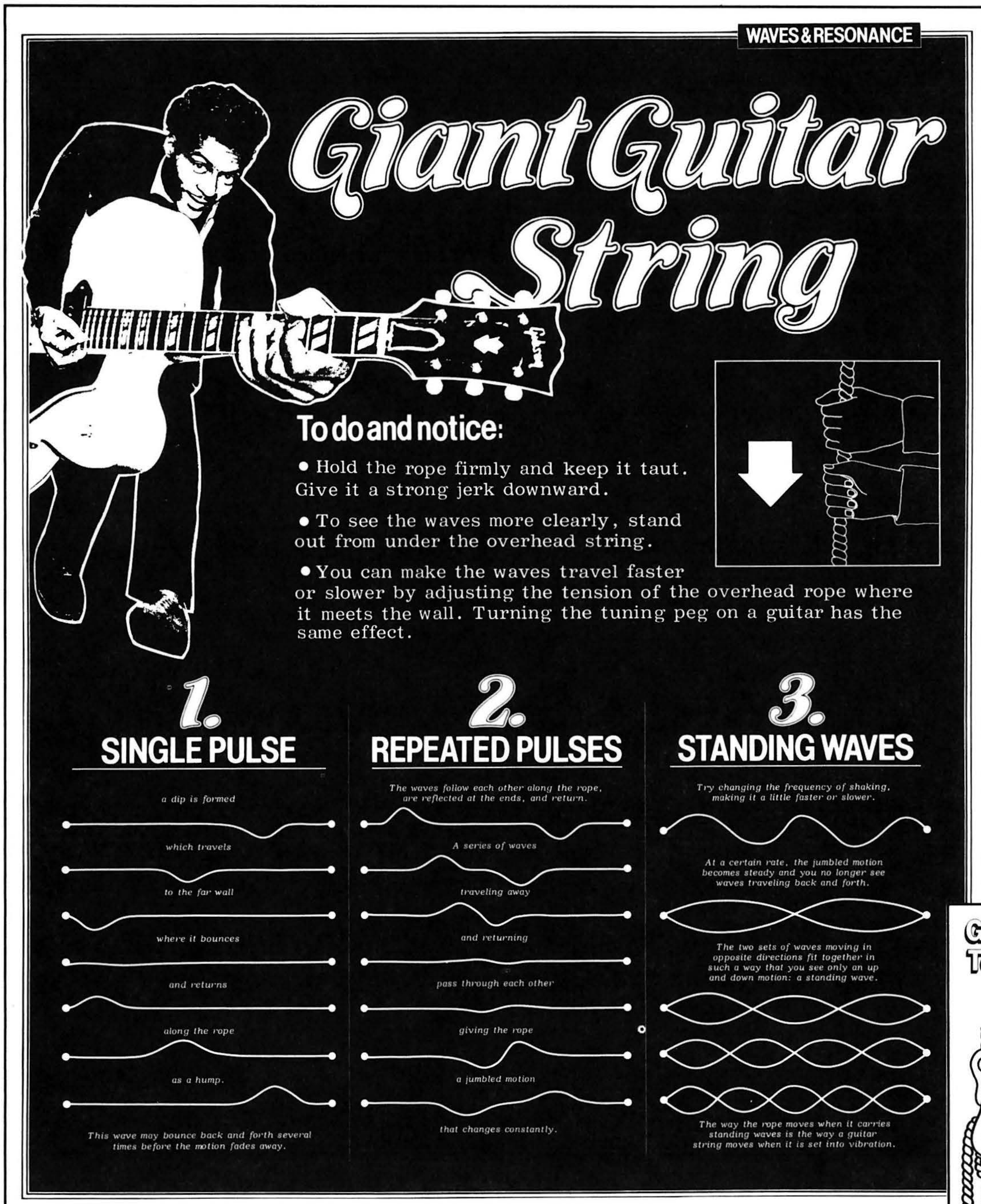
WAVES & RESONANCE
Giant Guitar String
To do and notice:
• Hold the rope firmly and keep it taut. Give it a strong jerk downward.
• To see the waves more clearly, stand out from under the overhead string.
• You can make the waves travel faster or slower by adjusting the tension of the overhead rope where it meets the wall. Turning the tuning peg on a guitar has the same effect.
1. SINGLE PULSE
a dip is formed
which travels
to the far wall
where it bounces
and returns
along the rope
as a hump.
This wave may bounce back and forth several times before the motion fades away.
2. REPEATED PULSES
The waves follow each other along the rope, are reflected at the ends, and return.
A series of waves
traveling away
and returning
pass through each other
giving the rope
a jumbled motion
that changes constantly.
3. STANDING WAVES
Try changing the frequency of shaking, making it a little faster or slower.
At a certain rate, the jumbled motion becomes steady and you no longer see waves traveling back and forth.
The two sets of waves moving in opposite directions fit together in such a way that you see only an up and down motion: a standing wave.
The way the rope moves when it carries standing waves is the way a guitar string moves when it is set into vibration.

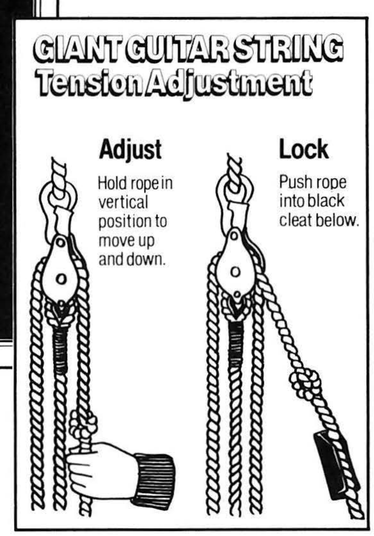
GIANT GUITAR STRING
Tension Adjustment
Adjust
Hold rope in vertical position to move up and down.
Lock
Push rope into black cleat below.

Organ Pipe

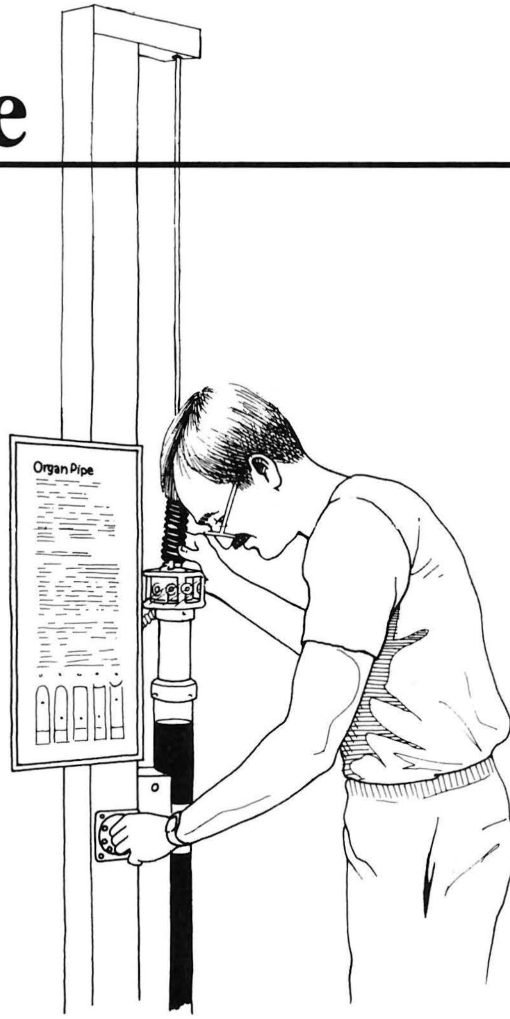

Description

A speaker plays a pure tone, which can be varied in frequency, into a tube whose length can be varied. As the tube is telescoped to different lengths, the tone becomes much louder at very specific points. These are the resonance points of the tube for that tone. If the tone has a higher frequency, the resonant points are closer together.

Construction

This exhibit is built around two telescoping pieces of plexiglas tubing. The larger outside tube has an inside diameter of 2 1/2'' and is 44'' long. The smaller inside tube, also 44'' long, has an outer diameter of 2 1/4''. A 2'' transistor radio speaker is mounted 1/2'' above this inside tube (see diagram). It is important to leave some space between the speaker and the tube for the sound to get out. The cylindrical speaker assembly has clear plexiglas walls for visibility, with lots of large holes drilled in it so the sound can be heard. The speaker is connected to the electronics with a telephone handset coily cord, which is fixed in place at both ends with wire tie-downs.

The speaker assembly (2 1/2'' tall and about 4 1/2'' diameter) is fastened to and supports the small tube. A nylon cord, suspended over two pulleys, connects the small tube assembly to a counter-weight, which rides up and down inside a wood column next to the tube assembly. The total up and down travel of the inner tube is about 34''. Note that a piece of flexible radiator hose (about 11'' long) is hose-clamped to an aluminum cylinder welded to the cap of the speaker assembly; this prevents shock to the tube at its upper limit. The supporting nylon cord attaches to an ''L'' bracket fixed to the center of this hose stub.

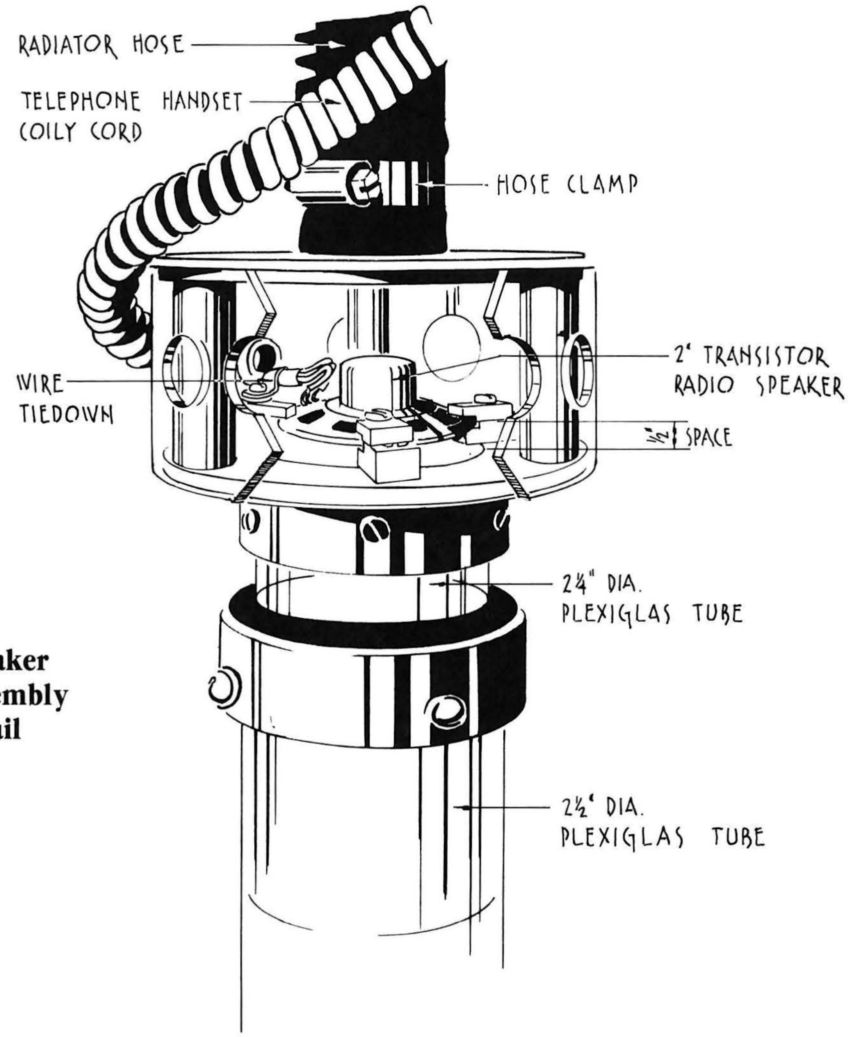

Speaker Assembly Detail

Because we want the visitor to be able to find the shortest possible length of pipe that will resonate (1/4 of a wavelength long), we fill the bottom tube with water. The water is dyed with food coloring and has an algaecidal agent (benzalkonium chloride 17%) added to it. We tried to add a wiper (a CR Industries oil seal #23701 if you insist on trying) to the top of the big tube but found that it was better just to leave a small space and allow the excess water coating the small tube to simply run down the side and back into the big tube. The wiper was originally put in to keep people's dirty hands from polluting the water; now we just change the water more frequently.

The variable oscillator electronics are in a watertight box attached to the back of the tall wooden support. The knob that varies the frequency is on the front of the support. The frequency is variable from 200 Hz to 2000 Hz.

The large tube is strapped with stainless steel strips to a wooden support carved out to accommodate the tube's outside diameter. A strip of plexiglas glued along the tube's length fits into a slot cut in the wood support; this "key and groove" keeps the tube from rotating.

Critique and Speculation

It would be nice to have some kind of tape measure attached to the side of the small tube so that students and teachers could make accurate measurements with the exhibit. A digital frequency counter—or at least a more accurate oscillator knob—would also be helpful.

Note: Function Generator Kit JE2206B available from:
Jameco Electronics
1355 Shoreway Road
Belmont, CA 94022
telephone: (415) 592-8097

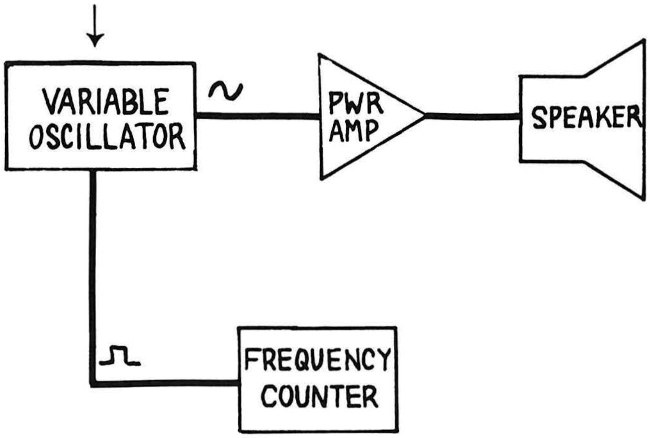

Please note: The Frequency Counter is a suggested addition to this exhibit.

Electronics Block Diagram

Related Exploratorium Exhibits

Resonance
Coupled Pendulums; High and Low Q; Organ Pipe; Resonant Rings; Resonator; Visible Effects of the Invisible; Voice Trombone; Aeolian Harp; Sound Column; Pipes of Pan.

Phase
Slow Oscillations; Two Wheels and a Ball.

Harmonics
Bells; Frequency Excluder; Giant Guitar String; Harmonic Series Wheel; Multiplied Glockenspiel; Piano Strings; Vidium; Violin Tone Color.

Sound Production
Ear Piece; Fading Tone; No Sound Through Empty Space; Tesla Coil.

Waves, Standing
Wave Machine; Vibrating String; Longitudinal Wave; Kettledrum.

Exploratorium Exhibit Graphics

Organ Pipe

To do and notice

Move the tube up and down. Notice that the tone gets louder and softer. By moving the tube, you change the distance between the speaker in the top of the tube and the water.

Set the dial at 400. Notice that the tone is loudest when the distance from the speaker to the water is 7 inches, 23 inches, or 38 inches.

What is going on

When the dial is at 400, the speaker pushes down on the air in the top of the tube 400 times per second. Each push of the speaker creates a *sound wave*, a pulse of high air pressure followed by an area of low pressure. The sound waves travel down the tube, reflect from the water, and travel back up the tube. If the high air pressure pulses of the reflected sound waves matches up with the high air pressure pulses of the newly generated sound waves, then the two sets of waves add together to make a louder sound.

When the dial is at 400 and the tube is set at 7 inches, the time it takes a wave to make the round trip from the speaker to the water and back matches the time between pulses of high pressure. At this distance, the sound waves add together. If you set the tube so that the speaker is a little bit farther from the water or a little bit nearer the water, the sound waves don't add together, and the organ pipe will make a softer sound.

When you turn the dial from 400 to another number, you change the *frequency*, the number of times the speaker pushes against the air each second. Since changing the frequency changes the time between pulses, the positions of the tube that produce a loud tone will be different for each frequency.

Pendulum Table

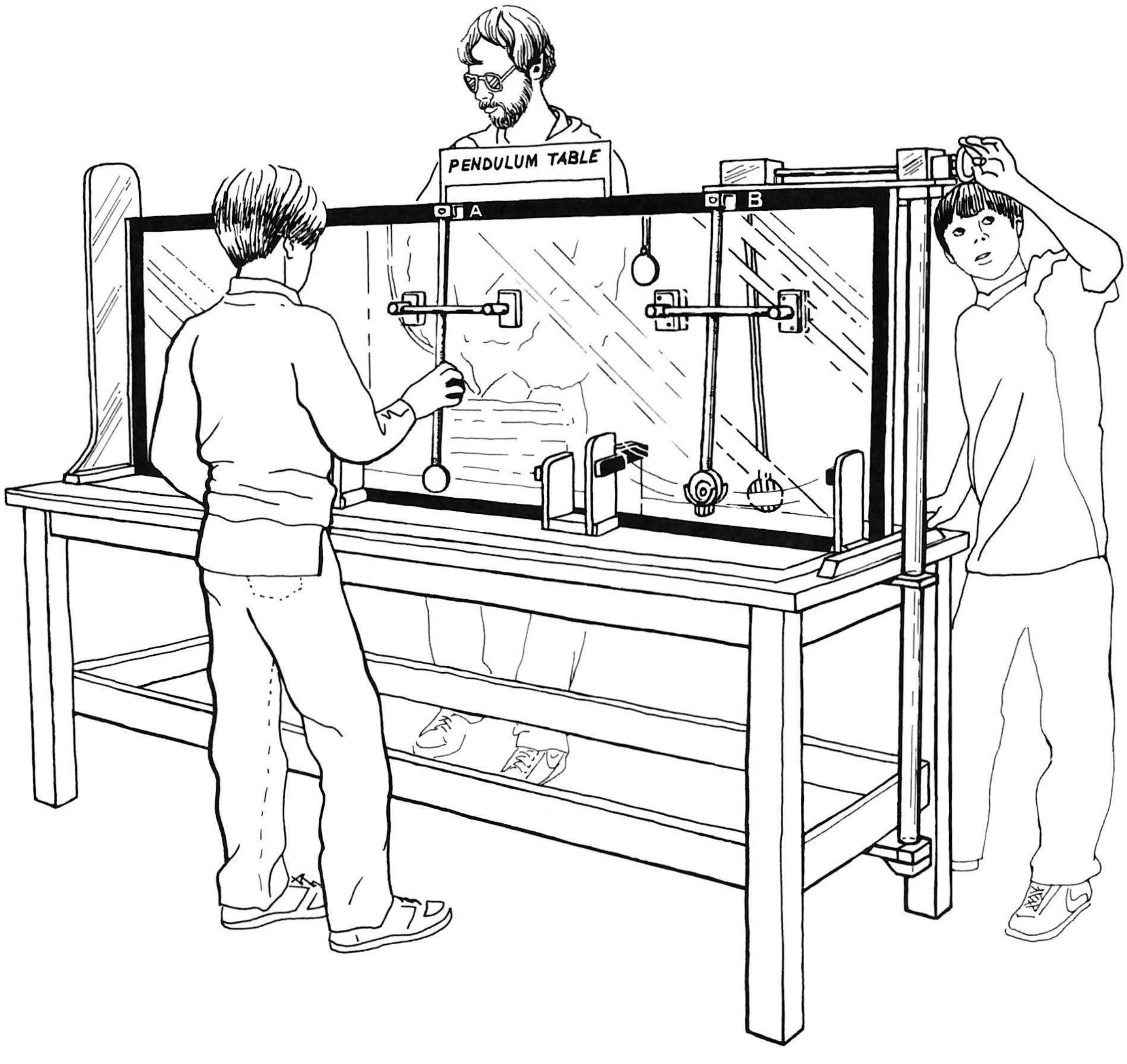

Description

The pendulum table is a multifaceted exhibit that allows the visitor to learn about simple harmonic motion and to change pendulum variables in a structured way. There are seven different pendula on the table.

Construction

All pendulums are built on a single long table. The table has a vertical pane of plexiglas, framed with steel square tube, extending its full length along the center line. Pendulums are mounted on the steel frame and various other paraphernalia are mounted on the plexiglas, with pendulums 1 through 4 on one side of the partition and pendulums 5 through 7 on the other side. Each pendulum is described separately below. Where two or more pendula have parts in common, they will be described once, with notes indicating the other places where they are used. You will need to refer frequently to the accompanying diagrams when reading the descriptions below.

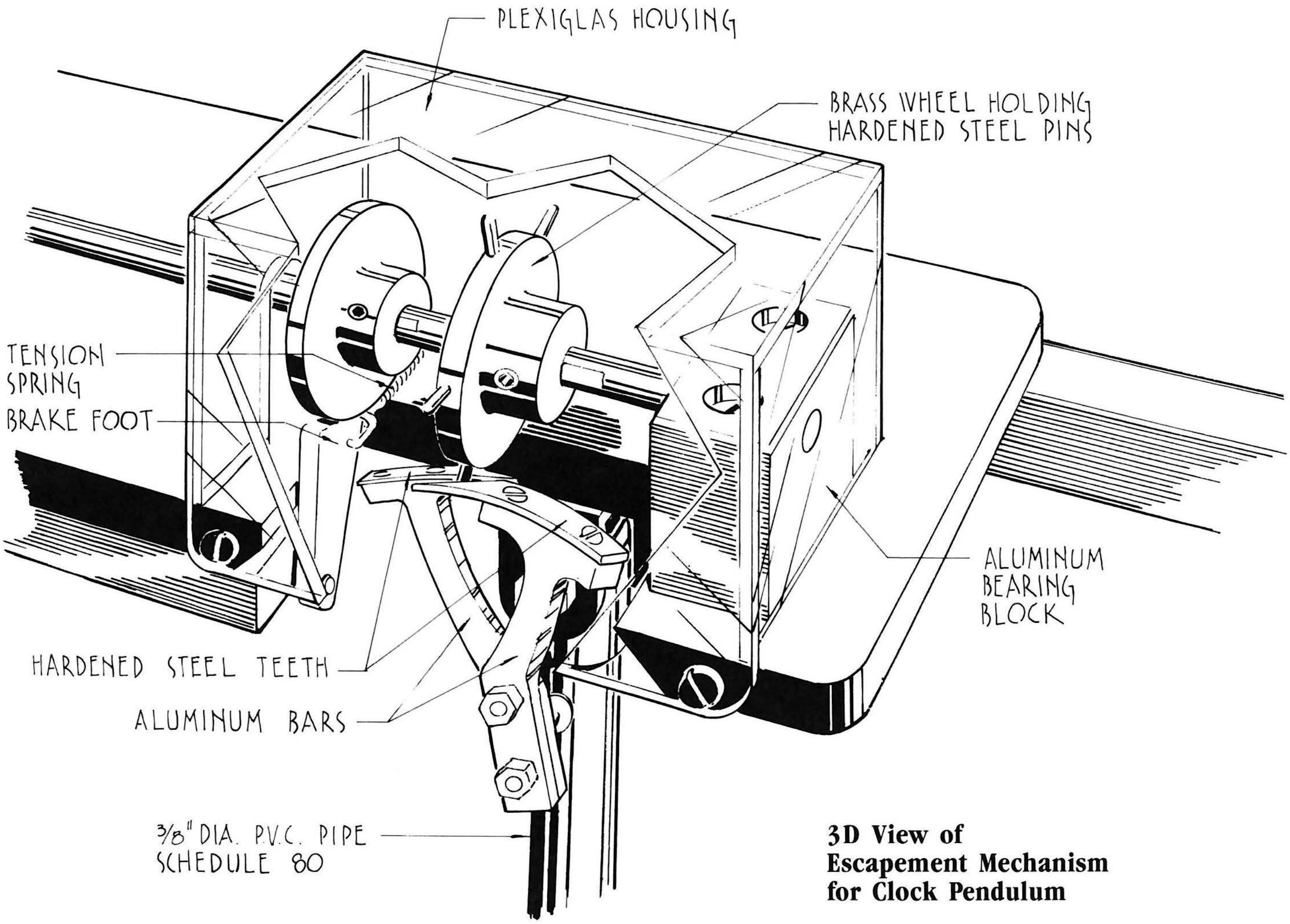

3D View of Escapement Mechanism for Clock Pendulum

Description

1) *Clock Pendulum*—This fixed length pendulum has a weight driven escapement mechanism similar to that on a clock.

Construction

1) *Clock Pendulum*—This rather complicated pendulum (complicated to build, not understand) is a simple escapement mechanism that is driven by a falling weight. The weight (some large nuts) hangs at the end of a nylon string, which is wrapped around a nylon drum attached to the drive shaft. The weight travels up and down inside of an appropriate size plexiglas tube which keeps the public from pulling down on the string. (The tube also keeps the public from attempting to swing the weight as if it were just another pendulum on the exhibit.)

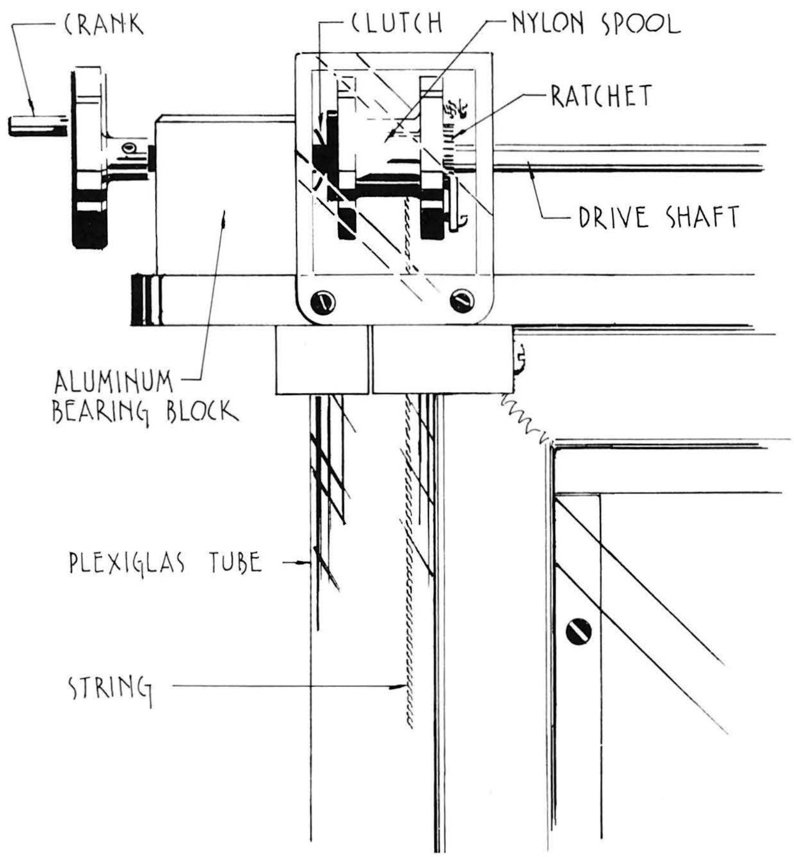

Crank and Spool End of Clock Pendulum

I'll now describe the components along the drive shaft from hand crank to pin wheel. The drive shaft is actually two pieces. One piece extends from the crank through an aluminum bearing block to the machined nylon spool around which the weighted string winds. The nylon spool is not rigidly attached to the shaft, but is free to rotate on it. A spring washer and two brass washers are sandwiched between the aluminum bearing block and act as a clutch that allows the visitor to turn the nylon spool without applying so much torque that the mechanism is damaged or the string broken when fully wound. Here, near the spring washer, is where the left shaft is supported by the right shaft. A pawl (attached to the right side of the nylon spool) and ratchet gear (on the shaft to the escapement) allow the spool to be wound without turning the shaft to the escapement. This shaft extends out of the protective plexiglas housing (where the visitor has a chance to feel its movement) and into the plexiglas box housing the escapement. From left to right, the escapement consists of a "disk brake" and tension arm to keep the pendulum from building up too much energy, a brass wheel with hardened steel pins to drive the pendulum, and the right-hand bearing block.

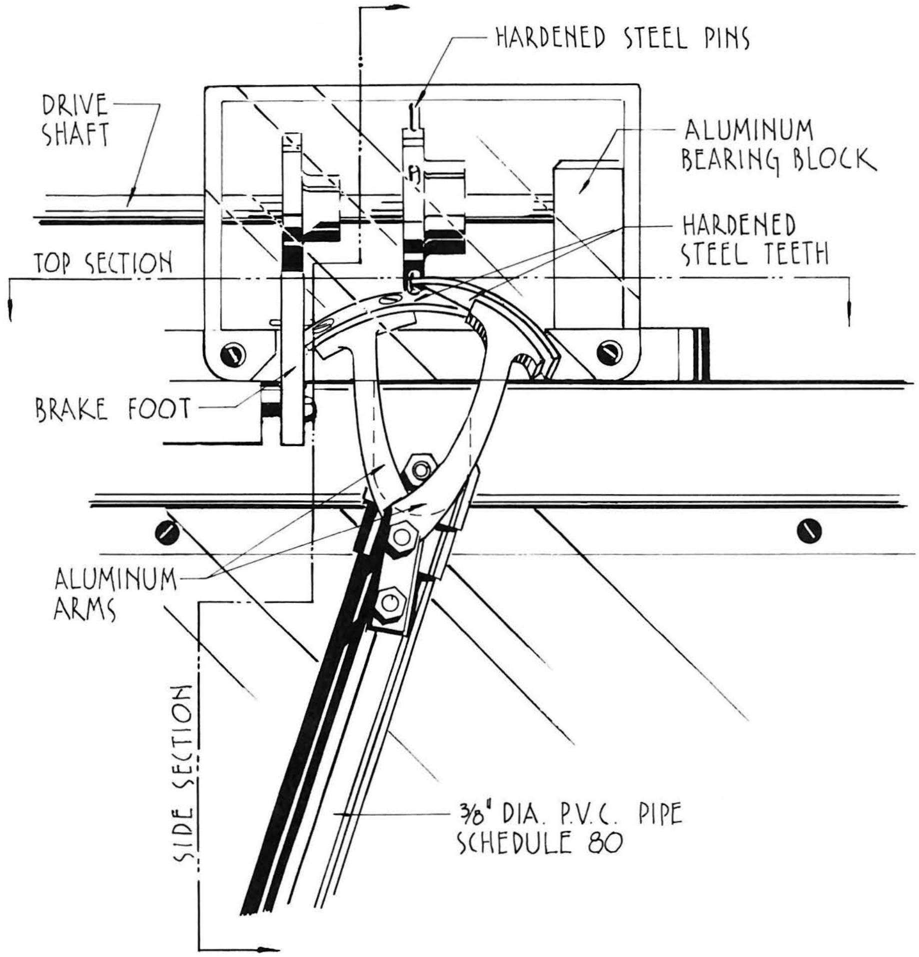

Front View of Escapement Mechanism for Clock Pendulum (Note Secion Lines)

The wishbone-shaped escapement mechanism attached to the top of the pendulum intercepts the pins as they rotate below the drive-shaft and towards the front of the exhibit. The pins push forward on the two hardened steel teeth of the wishbone. As the pins slide along the slope of the teeth, the pendulum is pushed alternately to the right and left, causing it to swing. Note the shape and angles of the teeth in the detailed diagram. You will have to experiment with these for the best alignment. A guard attached to the plexiglas backboard traps the pendulum rod and limits its movement to one plane at some maximum amplitude. Rubber bumpers near the table top also act as amplitude limits. These same guards and bumpers are used on pendulums 6 and 7.

The length of all of our long pendulums is 21", and all pendulum shafts (pendulums 2, 5, 6, and 7) are made from 3/8" schedule 80 PVC pipe. The bob at the end is 2-1/2" diameter and 5/8" thick stainless steel. The top of the pendulum is supported on ball bearings (see detail diagram) to minimize frictional loss. This same mounting method is used on pendulums 2, 6, and 7.

Clock Pendulum

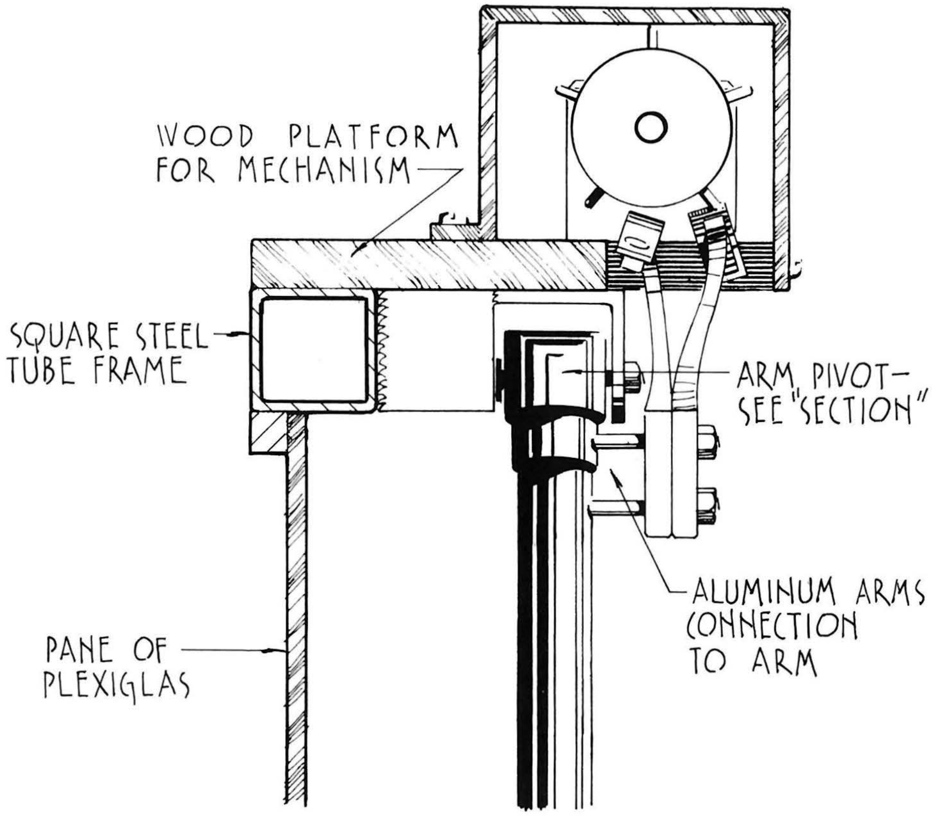

Side Section

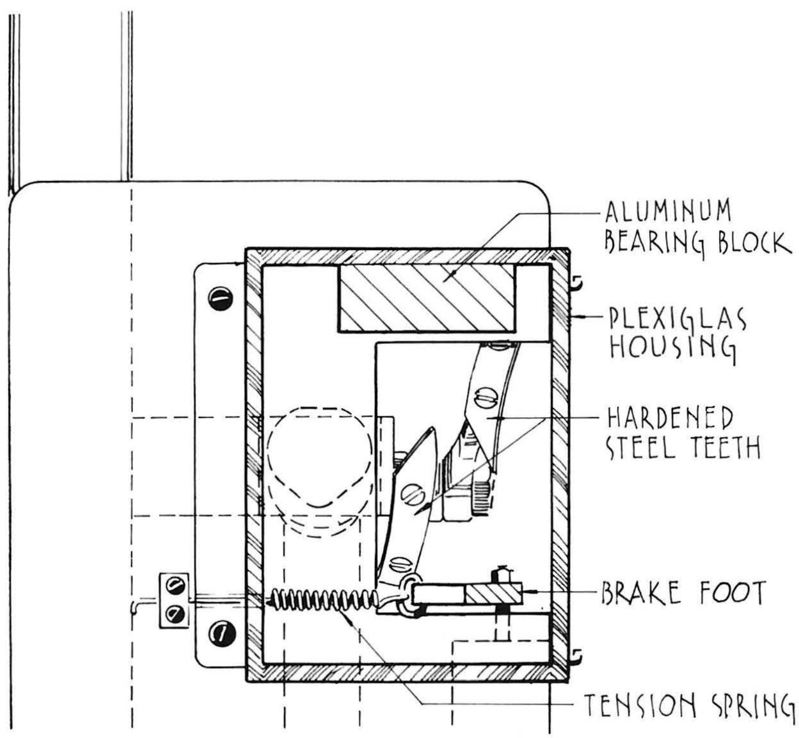

Top Section

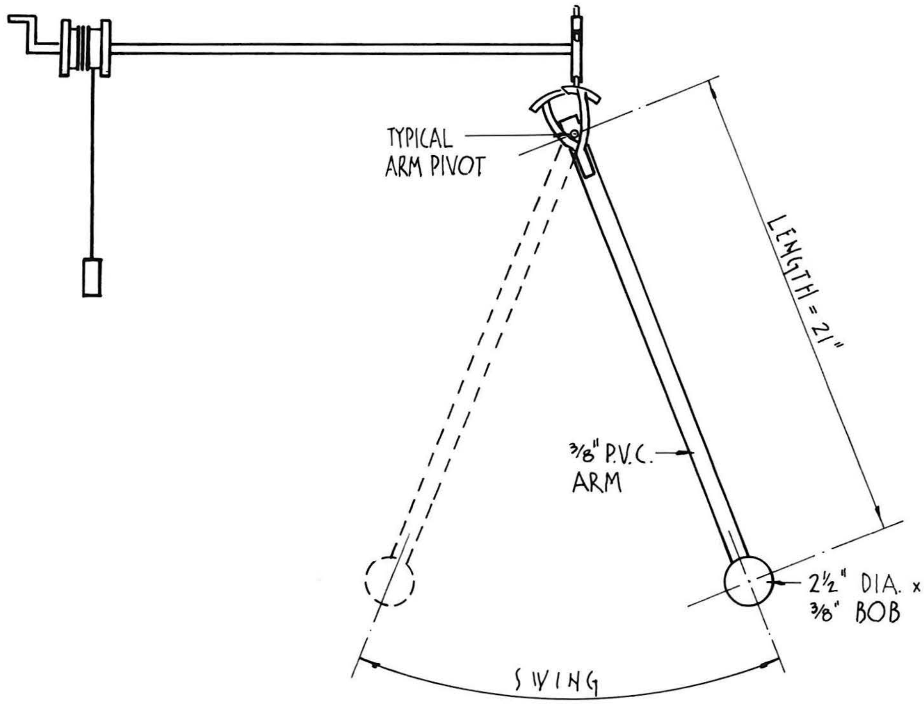

Exploratorium Exhibit Graphics

1. CLOCK PENDULUM

When you wind a pendulum clock, you raise a weight. The clock combines the energy of the falling weight with the swing of the pendulum to create a regular motion.

To do and notice:

- Wind the key on the left to lift the weight in the clear plastic tube. Give the pendulum a very gentle push to get it started, then let it swing on its own.

- Look inside the clear box at the top of the pendulum. As the gear teeth slide on the pendulum arm, they give the pendulum a small push. Notice that only the first few pushes make the pendulum swing higher.

What is going on:

A pendulum swings at a constant rate. As it loses energy to friction, the speed it travels at any point in its swing decreases. However, it also swings through smaller and smaller arcs, and therefore has a shorter distance to travel. Consequently, the time it takes for the pendulum to complete one swing (the *period*) remains about the same. For this reason, pendulums are used in clocks to mark time.

The device in the clear box at the top of the pendulum is called an *escapement*. To keep the pendulum swinging, the escapement must:

1) link the rate at which the weight drops to the pendulum's swing, and

2) take the stored energy of the weight's controlled fall and use it to give the pendulum a series of small pushes that just compensate for friction.

By doing these things, the escapement combines the stored energy of the weight with the swing of the pendulum to create a regular motion.

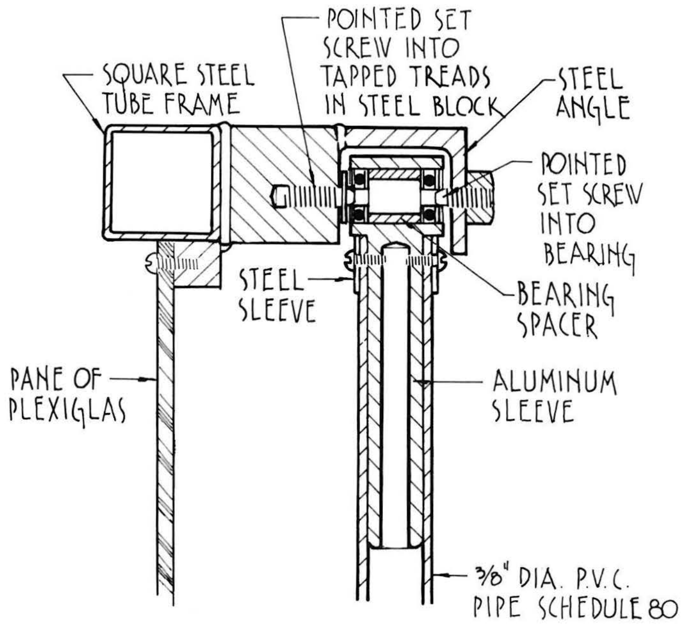

Pendulum Bearing Mounting (Pendula 1, 2, 6 and 7)

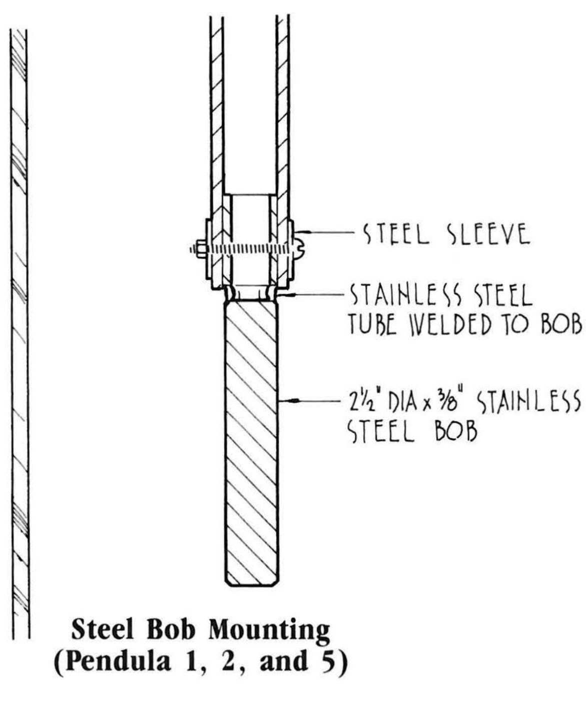

Steel Bob Mounting (Pendula 1, 2, and 5)

Description

2) *Short Pendulum*—This pendulum is one-quarter the length of the *Clock Pendulum* but swings with half the period.

Construction

2) *Short Pendulum*—This pendulum is one-fourth the length of pendulum 1, and therefore swings with a period that is one-half that of pendulum 1. Bearing mount, shaft, and bob are the same size as pendulum 1's. It has no escapement.

Short Pendulum

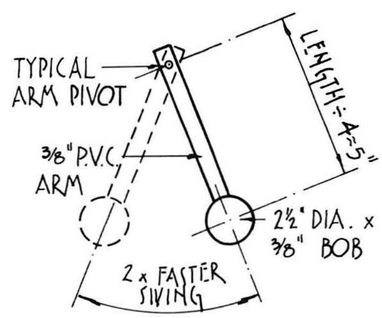

Exploratorium Exhibit Graphics

2. SHORT PENDULUM

If you want a pendulum that completes a swing in half the time, make it one quarter the length.

To do and notice:

- Notice that this pendulum is one-quarter the length of the pendulum to the left.
- Swing both pendulums and compare the rate at which they swing. Notice that the short pendulum swings at twice the rate of the long one.

What is going on:

The time it takes a pendulum to complete a swing (the *period*) depends on the pendulum's length and the force of gravity.

These factors are combined in the formula for determining a pendulum's period:

$$period = 2\pi \sqrt{length/gravitational\ pull}$$

If you want to double the period of a pendulum, you must make the pendulum four times as long. If you want to triple the period, you must make the pendulum nine times as long. To change the pendulum's period by changing the gravitational pull, you would have to leave the Earth.

To learn more about why the pendulum's period is determined by its length and the force of gravity, see PENDULUM OF VARIABLE LENGTH.

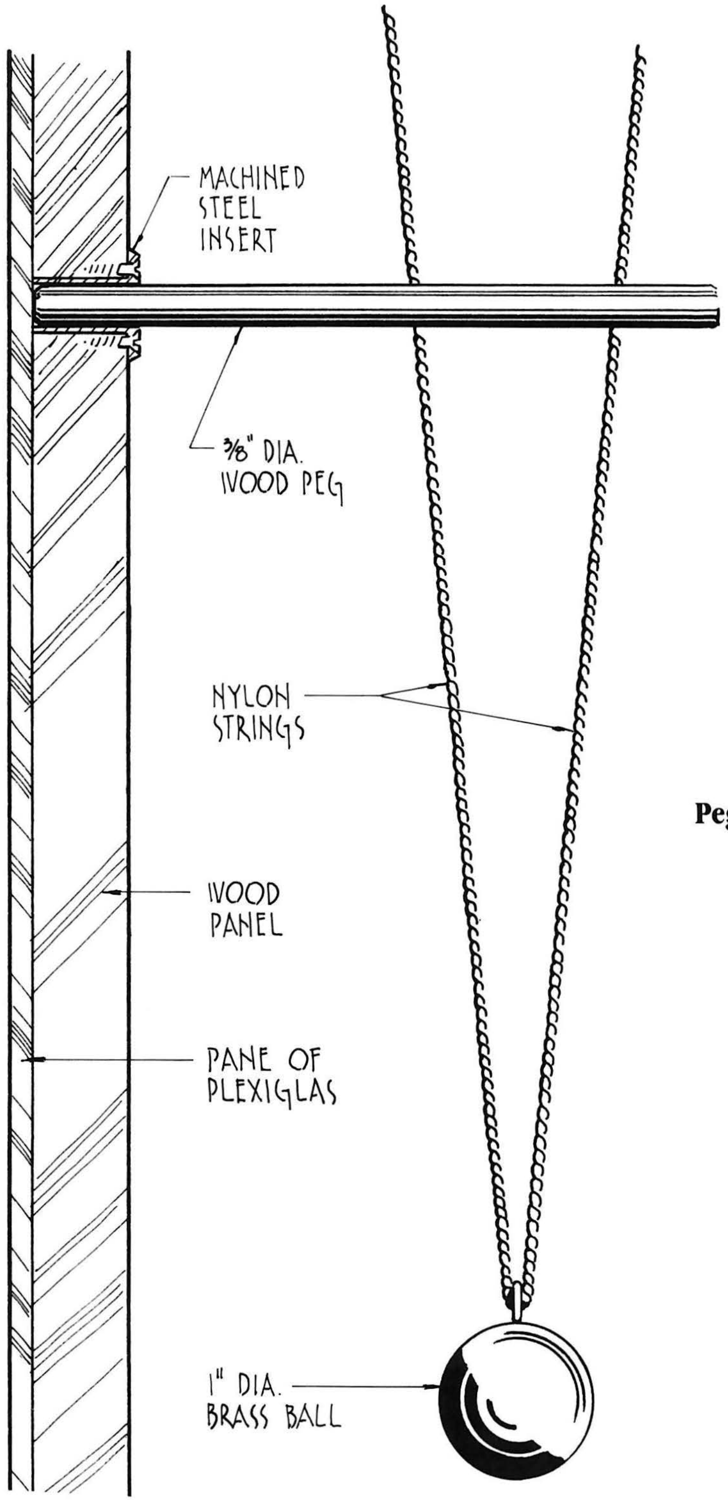

Pegboard Pendulum

Description

3) *Pegboard Pendulum*—This one allows a wooden peg to obstruct the string "shaft" of the swinging pendulum. Using reference marks on the backboard, the experimenter can observe that the pendulum always swings to the same height—a demonstration of conservation of energy.

Construction

3) *Pegboard Pendulum*—This pendulum is a 1" diameter brass ball that is hung by a steel screw-eye from two nylon strings, which form a "V" shaped support. The strings are 3" apart at the top, tied through screw-eyes. The "V" suspension keeps the pendulum swinging in one plane.

A piece of hardwood, drilled with a series of holes, covers the plexiglas behind this pendulum. The holes have machined steel inserts in them. Wooden pegs (kept in a little wooden peg pen on the table) can be inserted onto the holes to interfere with the swing of the pendulum. There are also horizontal strips of hardwood along the backboard, which can be used to measure the height of the pendulum's swing.

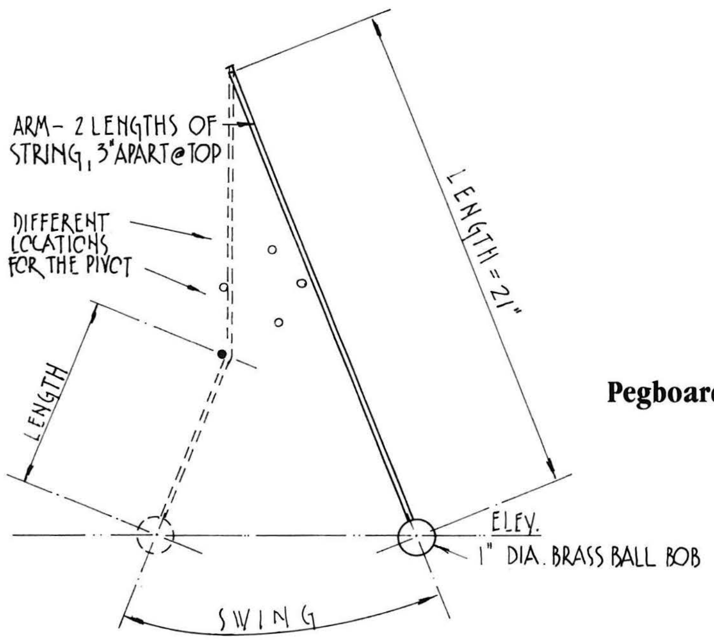

Pegboard Pendulum

Exploratorium Exhibit Graphics

3. PEGBOARD PENDULUM

A pendulum reaches the same height on either side of its swing.

To do and notice:

- Put a peg in one of the holes. Lift the pendulum to one side and notice where the center of the ball is when you lift it. Let go and notice how high the ball swings at the far end of its arc.

- Move the peg or add another peg. Notice that the weight reaches the same height on either side of its swing, no matter where the pegs are placed.

What is going on:

When you lift the weight up to start the pendulum swinging, you are adding energy. With each swing, the pendulum loses very little energy. Because it has the same energy at both sides of its swing, the ball must reach the same height, even if it hits a peg.

When the pendulum is swinging, its energy can be in two forms: motion or the pendulum's ability to start moving. At the end of its swing, the pendulum is momentarily motionless, but the pull of gravity gives it the ability to start moving. At the bottom of its swing, the pendulum's energy is all energy of motion— it has fallen as far as it can fall without breaking the string. As the pendulum swings to the other end of its arc, it loses speed, but once again gains the ability to start moving. The energy that you add to the pendulum can change from one form to another— from the energy of motion *(kinetic energy)* to the ability to start moving *(potential energy)*. However, the total amount of energy remains the same.

Counter-Balanced Pendulum

Top View

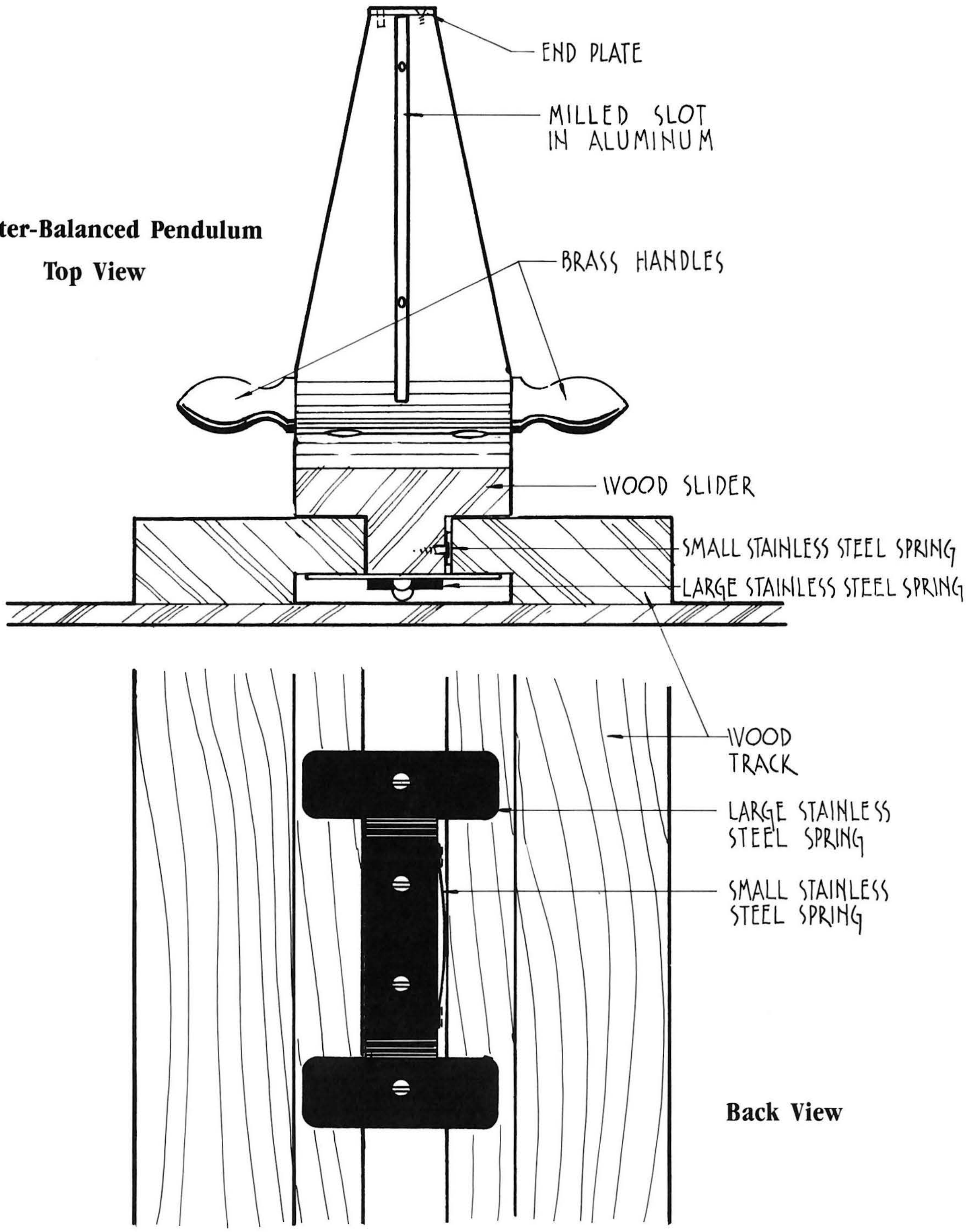

Back View

Description

4) *Pendulum of Variable Length*—The pivot point of this string pendulum can be slid up and down, varying its effective length.

Construction

4) *Pendulum of Variable Length*—Like pendulum 3, this is a brass bob hung on two nylon strings. The strings pass through a milled slot in a 1/4'' aluminum plate. The plate slides up and down in a track (see diagram), resulting in a pendulum whose effective length can be varied. The slider and track must have enough friction between them to keep the slider in place when released at any given position. We have capped the end of the slot so the strings are captured within and cannot be removed (unless we unscrew the endplate).

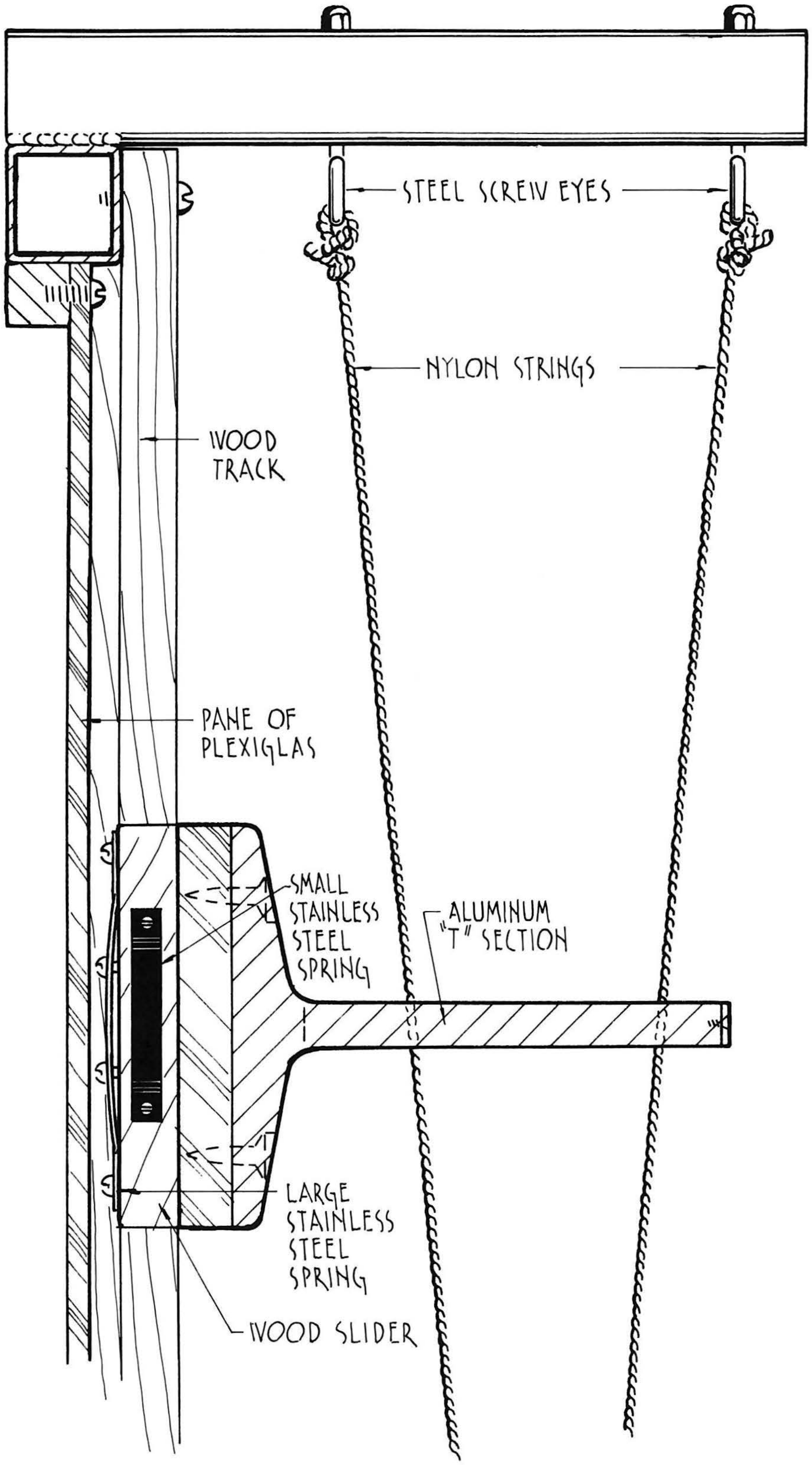

Variable Length Pendulum Slider
(Side View)

Pendulum of Variable Length

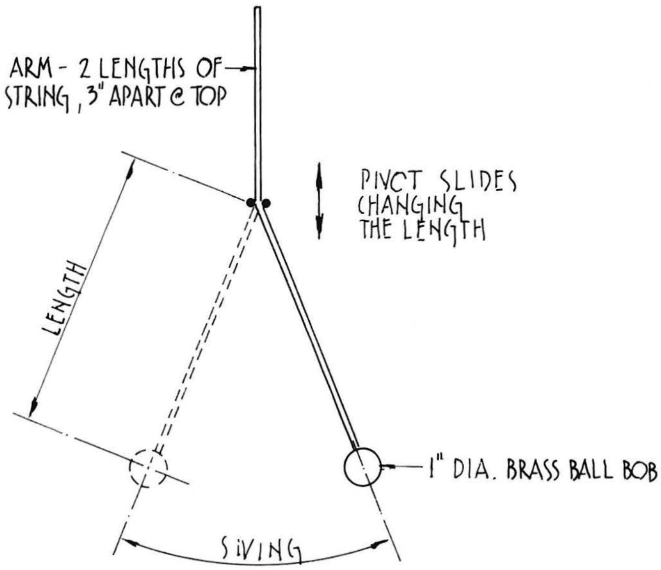

Exploratorium Exhibit Graphics

4. A PENDULUM OF VARIABLE LENGTH

Changing the length of a pendulum changes the time it takes to complete one swing.

To do and notice:

- Start the pendulum swinging from side to side.
- Move the slide slowly up and down.
- Notice that the pendulum completes a swing more quickly as it gets shorter and more slowly as it gets longer.

What is going on:

The time it takes for a pendulum to complete a swing is called the pendulum's *period*. The pendulum's length and the pull of gravity determine the period.

The length is important because it determines the path that the weight at the end of a pendulum (the *bob*) travels. When a long pendulum starts swinging, the bob has farther to travel than the bob of a short pendulum swinging at the same angle. The longer the pendulum, the larger the arc.

The pull of gravity is important because gravity helps keep the pendulum moving. Gravity pulls on the pendulum's bob and the weight resists this pull. This resistance is due to the weight's *inertia*. Inertia also tends to keep the weight moving once it starts moving. A pendulum keeps swinging because of the interplay of gravity and inertia. When you lift the pendulum to start it swinging, gravity pulls it back to the center. When it reaches the center, inertia keeps it moving up the other side of its swing until the pull of gravity overcomes the inertia. At this point, the pendulum stops, then swings back again.

The formula for calculating the pendulum's period combines the effects of the pendulum's length and the pull of gravity:

$$\textit{period} = 2\pi\sqrt{\textit{length}/\textit{gravitational pull}}$$

Deriving this formula requires an understanding of calculus and trigonometry, but using it requires only simple math.

As you can see, the weight of the pendulum is not in the formula. To learn why, see PENDULUM OF VARIABLE WEIGHT.

The formula also does not include the angle of the pendulum's swing (the *amplitude*). The formula is an approximation; the amplitude does affect the pendulum's period. However, at small amplitudes (less than about 12°),the effect of changes in amplitude are relatively insignificant.

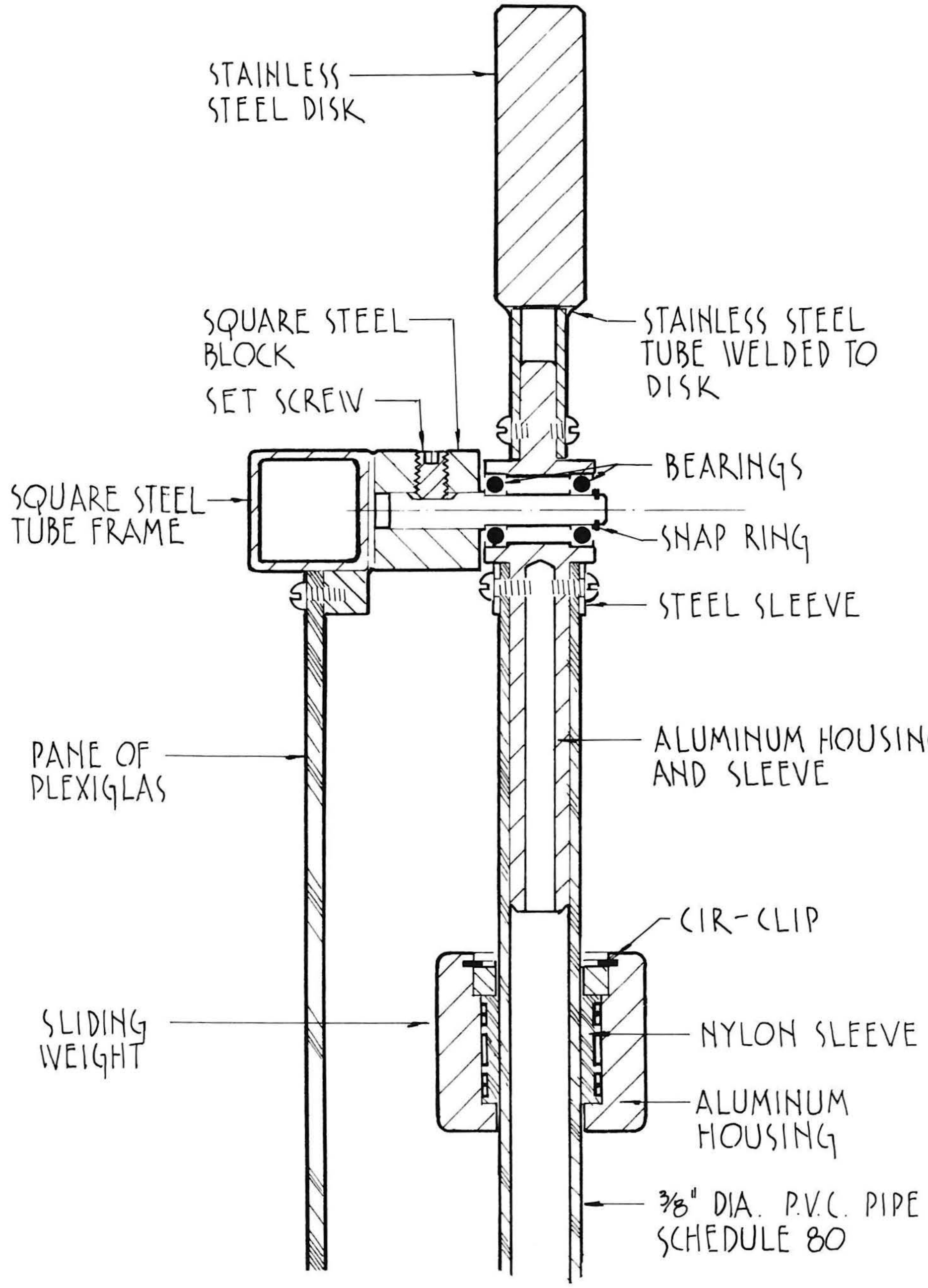

Counter-Balanced Pendulum Section Detail

Note: A cap at the end of the tube keeps the weight from flying off.

Description

5) *Counter-Balanced Pendulum*—A rigid pendulum, pivoted near one end, has weights on both sides of the pivot. Sliding the movable weight varies the period, and an extremely long period may be achieved.

Construction

5) *Counter-Balanced Pendulum*—This rigid-rod pendulum has weights on both sides of the pivot point. The PVC rod and fixed bob are described in #1 above. The fixed bob is located about 3'' from the pivot point and the movable weight (ours has about half the mass of the fixed bob) can slide from the pivot point to a maximum distance of about 17''. There must be enough friction between the movable weight and the PVC rod to keep the weight in place while the pendulum swings. Our movable weight has a split inner nylon sleeve, around which is wrapped a spring that creates friction between the nylon and PVC pendulum shaft. These components are housed in a machined aluminum weight with a cap that's held in place with a cir-clip (see diagram).

Because this pendulum is allowed to swing in a complete 360 degree arc, its pivot bearing is slightly different. The pendulum is mounted on a shaft that is supported only from the rear, and is held in place with a cir-clip at the shaft's end.

The more enthusiastic public will sometimes give this pendulum a good push and get it going at a high RPM. Since it is at one end of our table, we have put a plexiglas guard up there to protect innocent bystanders.

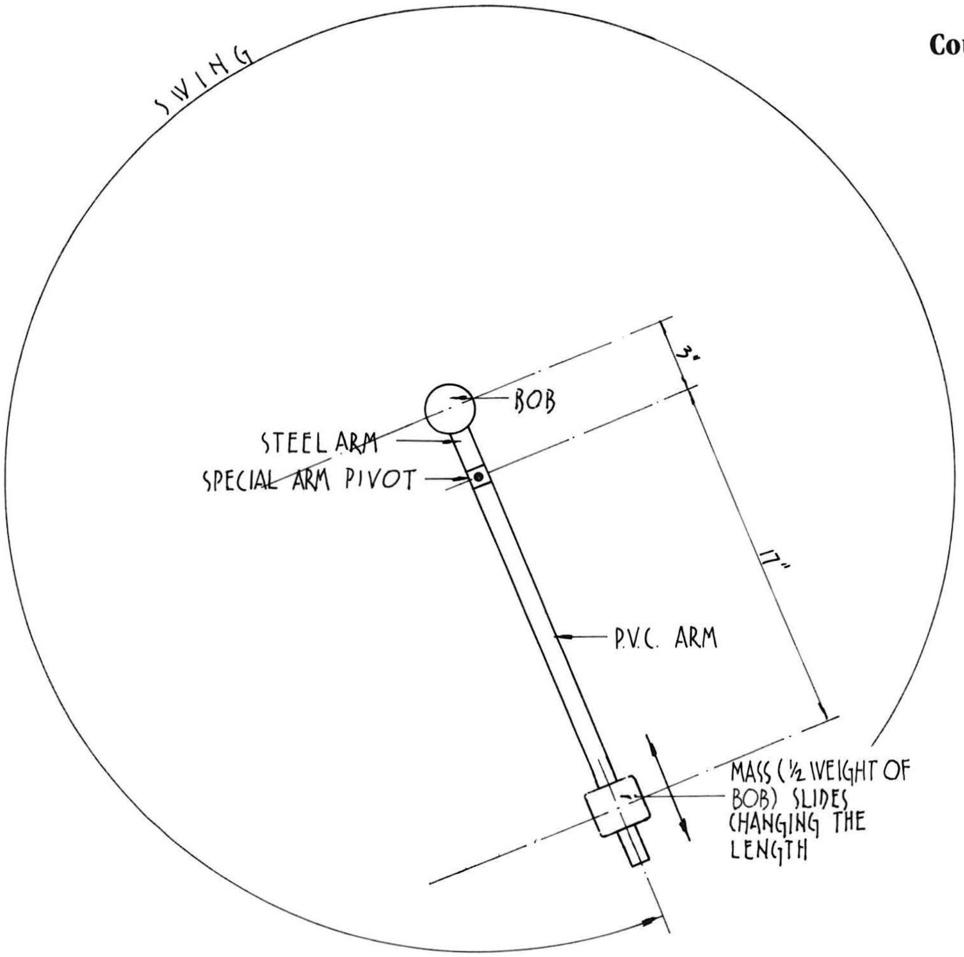

Exploratorium Exhibit Graphics

5. A COUNTER-BALANCED PENDULUM

This pendulum breaks the rules and shows that pendulums are really stranger than you think.

To do and notice:

- Notice that this pendulum has weights on both sides of its pivot. Slide the small weight up and down on the bar until the two weights are balanced and the bar remains horizontal. If you give the pendulum a small push, it won't swing back and forth. Instead it will spin.
- Move the sliding weight and swing the pendulum very gently. Notice how changing the position of the weight changes the way the pendulum swings.

What is going on:

You can think of this pendulum as two pendulums constantly at war. The pendulum at one end is being pulled down by gravity. But to swing down, it must fight gravity by lifting the counter-balancing weight at the other end of the shaft. Essentially, the counter-balancing weight decreases the pull of gravity on the pendulum, since part of the pull must be used to lift the counter-balancing weight.

When you move the sliding weight away from the pivot, you slow the pendulum down by making the weight on the other end of the shaft work harder; it must lift the sliding weight higher with each swing. You can make a big change in the rate that the pendulum swings by moving the sliding weight a very short distance.

If you move the sliding weight to the end of the shaft, this weight can overpower the weight at the other end of the shaft. The pendulum will turn on its pivot and the sliding weight will become the pendulum and the pendulum will become the counter-balancing weight.

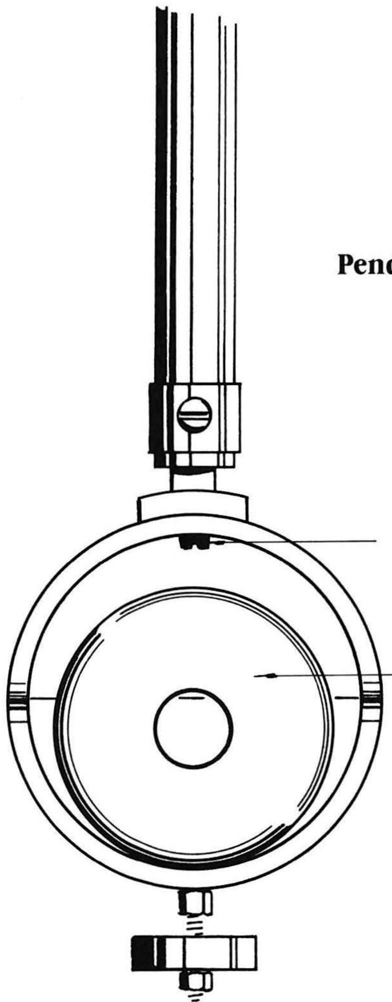

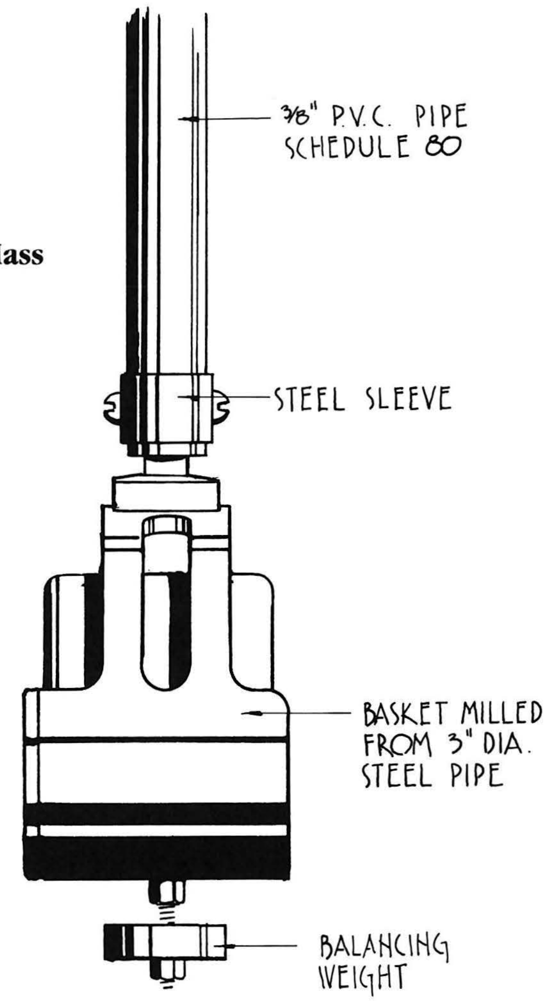

Pendulums of Variable Mass

Description

6) *Pendulum of Variable Mass #1*—One can add weight to this pendulum. The weight holder is near the center of the pendulum support; consequently adding weight raises the center of mass and decreases the period of swing.

7) *Pendulum of Variable Mass #2*—The same weight can be added to this as to the pendulum above, except that here the mass is added to the bottom of the pendulum. The center of mass remains unchanged and the period therefore is also unaffected.

Construction

6) *Pendulum of Variable Mass #1*—A steel weight 2-1/4'' in diameter, 1-3/4'' thick, and with a 5/8'' diameter hole running through its center, can be placed (by the visitor) in a welded aluminum basket that is fastened about 6'' above the bob of this pendulum. Note: the mass of the basket should be as negligible as possible without sacrificing durability. The hole through the weight makes it easier to place and remove it from the moving pendulum (you just stick your finger in the hole).

7) *Pendulum of Variable Mass #2*—The same steel weight as in #6 can be placed in a basket at the bottom of this pendulum. This basket is welded together from heavy formed 1/8'' thick steel, with its weight approximating the weight of the bob on pendulum 6; it is important that with all weights removed, the periods of pendulums 6 and 7 be the same, so that the visitor can properly compare them. Since it is difficult to predict where the center of mass of the heavy steel will end up, a small steel adjustment weight on a threaded rod is attached to the bottom of the steel basket and held in place with nuts. The weight is moved up and down until the periods of the two pendulums match.

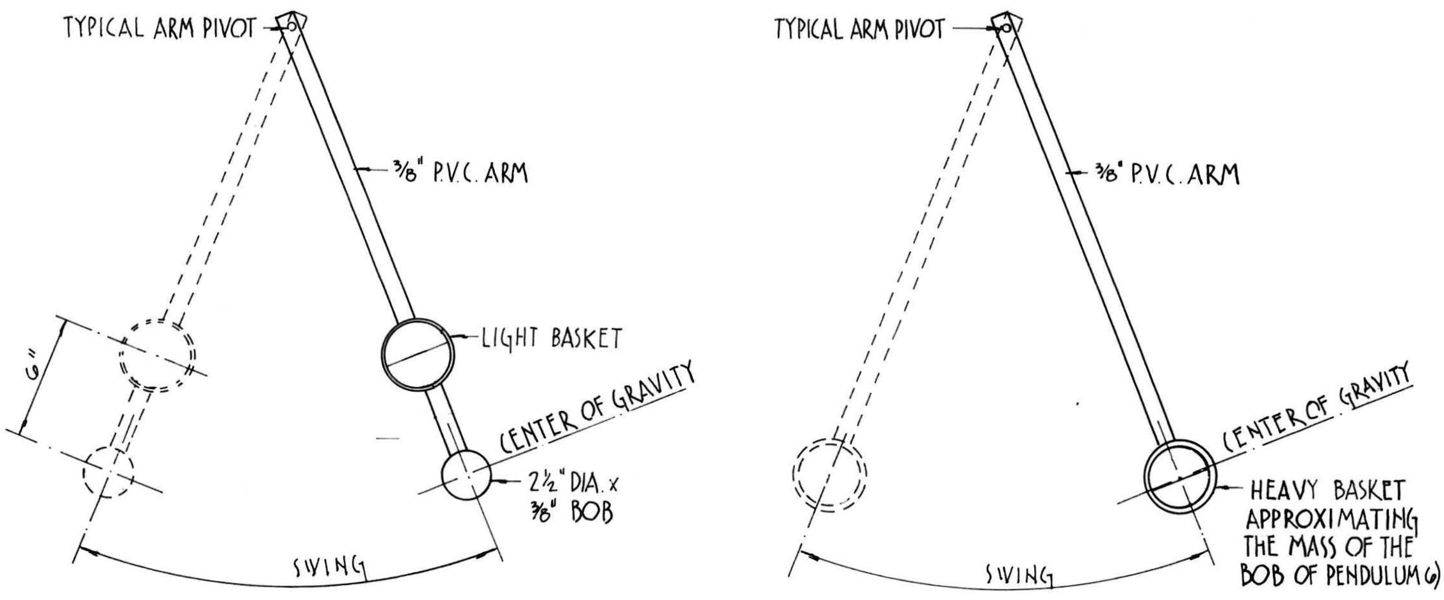

Pendulums of Variable Mass

Exploratorium Exhibit Graphics

6. & 7. PENDULUMS OF VARYING WEIGHTS

Changing the weight at the end of a pendulum doesn't change the rate at which the pendulum swings, but changing the distribution of weight does.

To do and notice:

- Remove the weights from pendulums A and B and swing the pendulums gently.

- Notice that if you start them together, they return to the starting point at the same time. The period of a pendulum is the time it takes to complete a swing and return to the starting place. These pendulums have the same period.

- Add a weight to pendulum B. Swing both pendulums again and notice that adding the weight doesn't change the period of pendulum B.

- Add a weight to Pendulum A. Swing both pendulums again and notice that pendulum A now returns to its starting place more quickly than pendulum B.

What is going on:

To understand why adding a weight to pendulum B didn't change its period, you have to understand something about gravity. In the early 17th century, Galileo experimented with falling weights and learned that two different weights, dropped an equal distance, fall at the same speed. If you drop a ten-pound weight and a one-pound weight from a tower, they hit the ground at the same time, traveling at the same speed.

If this seems strange to you, think of the ten-pound weight as a collection of one-pound weights bound together. Naturally, they all fall at the same speed and hit the ground at the same time. If you cut the ties that bound one weight to the others, they would still fall together.

How does this apply to pendulums? The pull of gravity keeps a pendulum swinging. Since gravity accelerates a pendulum with a light weight and a pendulum with a heavy weight at the same rate, two pendulums that are equal in length but different in weight will swing at the same rate.

When you add a weight to the pendulum on the left, you are changing the position of the weight and making the pendulum shorter. Shortening the pendulum makes it swing faster.

(See PENDULUM OF VARIABLE LENGTH.)

Critique and Speculation

The disk brake mechanism on pendulum 1 should be located next to a bearing support. At its present location, the side pressure from the spring deflects the axle.

Pendulums 1 and 2 are adjustable in length to allow trimming of their periods. We used screws through slots in the bob's shaft, but these have a tendency to get out of alignment. You might try a lead-screw type of adjustment that can be locked down.

Related Exploratorium Exhibits

Oscillation

Adjustable Plaything; Air Track; Drawing Board; Harmonic Series Wheel; Relative Motion; Sidebands; Vibrating String.

Resonance

Coupled Pendulums; High & Low Q; Organ Pipe; Resonant Rings; Resonator; Visible Effects of the Invisible; Voice Trombone; Aeolian Harp; Sound Column; Pipes of Pan.

Momentum Inertia

Balancing Stick.

Conservation of Angular Momentum:

Momentum Machine; Bicycle Wheel Gyro; Gyro Compass; Gyroscope.

Phase

Slow Oscillations; Two Wheels and a Ball.

Friction

Big Bearing; Capstan; Center of Gravity; Eddy Currents; Pluses and Minuses; Sailboat.

Pipes of Pan

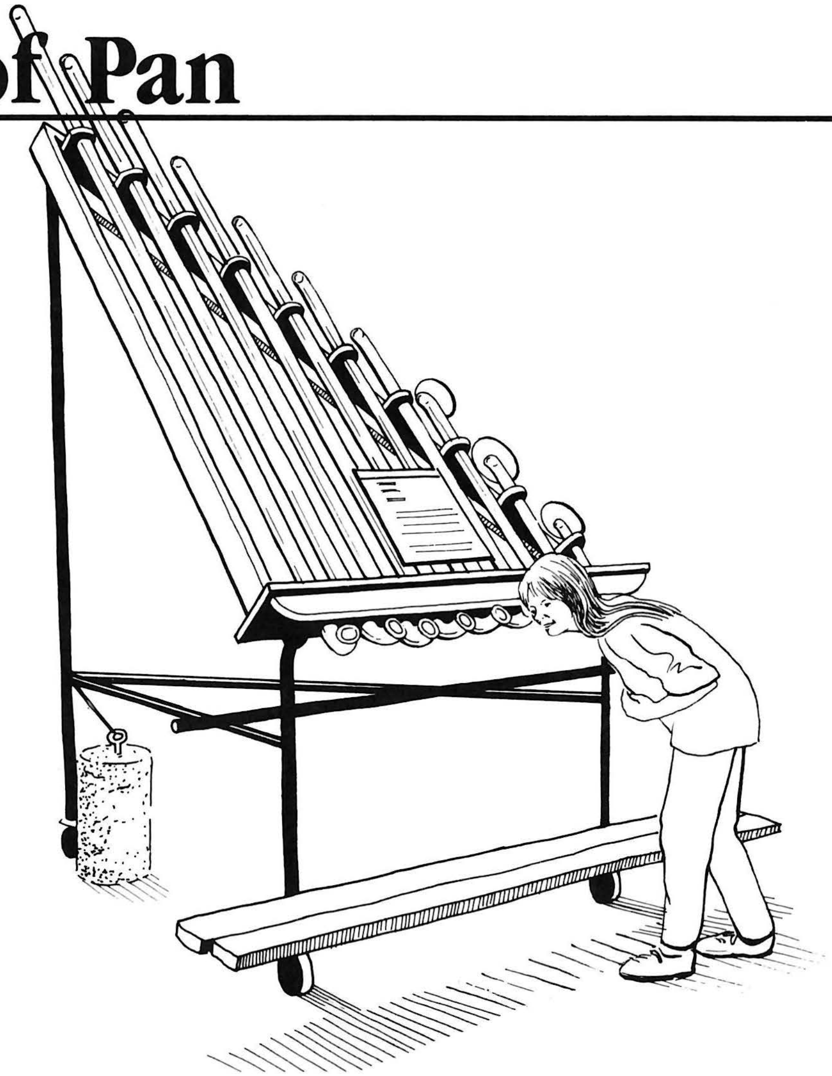

Description

Visitors can listen to background noise through each of ten pipes of varying length. The longer the pipe, the lower the tones that get selected from the noise of the museum. This is due to the sound resonance in the pipes.

Construction

The exhibit is constructed around a set of ten glass pipes, ranging from one to ten feet long (increasing by one-foot increments). These pyrex acid waste drain pipes are 1-1/2'' diameter; we have them cut to length by the distributor:

Westchem Equipment Co. Inc.
28301 Industrial Blvd., Building P
Hayward, California 94545
Telephone: (415) 782-3675

You can probably find your own local distributor for Corning glass products. We get the pipes with one beaded end and one plain end, and position the beaded end at the top. The lower end is connected to a 90 degree long radius sweep bend #720441 with a plain to beaded coupler #728571. If your straight sections have a bead on each end you will need to connect them to the 90 degree bends with #728561 couplings; unfortunately, you'll also have to redesign the wooden frame described below, since the beads won't fit through the holes cut to the diameter of the tube.

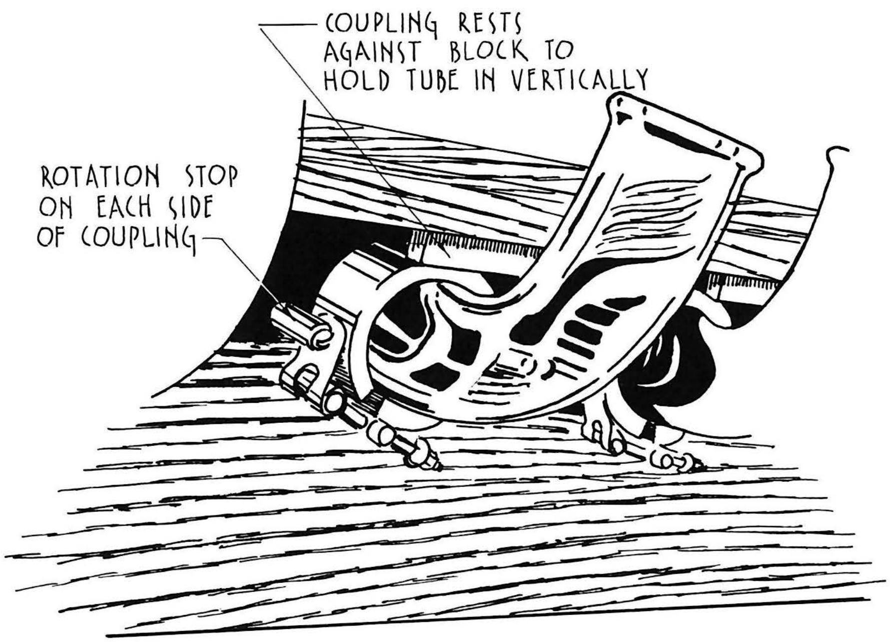

Detail of 90° Coupler and Rotation Stops

The pipes are held in a wooden frame in the shape of a large right triangle, with the upper ends extending through wooden rings mounted (dado style) along the hypotenuse. The lower ends pass through holes in the base—a 1x9'' plank of oak—and are coupled to the 90 degree bends below the base. The tubes are held in place vertically by the holes in the base (above the coupling), and by a strip of wood screwed into the base (below the coupling). They are kept from rotating by stops made from metal tubing and screwed into the base (see drawing). Some play was allowed here because we feared that holding them rigid would make them easier to break.

After some observation on the floor we decided that we should add circular plexiglas shields to the top ends of the lower 3 tubes, to protect listening ears from the whistling and screaming of pranksters.

The pipes and triangular wooden frame are held in a welded steel frame of 1-1/4'' pipe. The listening ends of the pipes are 40'' above the floor, making them difficult for little kids to use; we've added a 12'' high wooden step and a handrail for easier access.

Critique and Speculation

We've had reports that PVC plastic pipe doesn't work as well as glass pipe, while metal pipe seems to do just fine; experiment before you go out and buy 55 feet of tubing!

Because of the height of the exhibit, as well as the built-in step, it is quite difficult for people in wheelchairs to get to.

Exploratorium Exhibit Graphics

SOUND AND HEARING

Pipes of Pan

These pipes make music from background noise.

To Do and Notice:

☐ Put your ear to the bottom of each pipe and listen. Notice that pipes of different lengths make different sounds.

What is Going On:

If this room were absolutely silent, you wouldn't hear anything when you put your ear to one of these pipes. But the room is filled with sounds of all different pitches. Each pipe responds to sounds of one particular pitch.

A sound wave is a traveling vibration that creates areas of high air pressure and areas of low air pressure. A sound's pitch is determined by the wave's ***frequency***, the number of pulses of high pressure per second. When sounds in the room start the air inside these pipes vibrating, pulses of sound move down each pipe, then reflect back up again. If the time it takes a wave to make this round trip corresponds to the time between pulses of high pressure, then the incoming waves and the reflected waves add together. Sound waves of these frequencies reinforce each other and build up to make a louder sound.

As the length of the pipe increases, sound waves have to travel farther—and the trip to the end of the pipe and back takes longer. As a result, longer pipes reinforce low-pitched low-frequency sounds, and shorter pipes reinforce high-pitched high-frequency sounds.

Related Exploratorium Exhibits

Resonance

High and Low Q; Resonant Rings; Vocal Vowels; Voice Trombone; Resonant Pendulum; Vibrating String; Organ Pipe; Resonator; Theremin; Longitudinal Wave; Phase Pendulum; Piano Strings; Tesla Coil; Wave Machine; Aeolian Harp; Fading Tone; Visible Effects of the Invisible; Bells; Electromagnetic Spectrum; AM Lightning; Electric Pendulum; Air Reed; Coupled Resonant Pendulums; Sound Column; AM Radio.

Sound Production

No Sound Through Empty Space; Earpiece; Harmonic Series Wheel; Magnetic Tribbles; Music Room Guitars; Bronx Cheer Bulb; Drum; Speech Dissector; Two Ways to Look at Sound; Music Box.

Waves, Standing

Wave Upon Wave; Guitar String; Kettledrum; Pentachord.

Recipe No. 190

Visible Effects of the Invisible

Description

This is a variation on the "Kundt's Tube" experiment done by almost every college science student. A long tube partially filled with kerosene is stimulated with sound from a speaker at one end. At certain frequencies (the fundamental and its harmonics) the liquid in the tube will squirt up, forming fountains at the antinodes in the tube. The higher the frequency (and hence harmonic) the more fountains form—a spectacular demonstration of resonance in a pipe.

Construction

Our tube is made of plexiglas, 3" OD with 1/4" walls. The tube is a total of 5 feet in length, with the last 8 inches inclined at an angle of about 30degrees. This angle is not critical, but should be steep enough to keep the kerosene from running into the speaker, yet shallow enough to avoid reflection. To further protect the speaker from splashing kerosene, a piece of perforated sheet metal (3/32" holes), cut into an ellipse, is held in place mid-way up the tilted section; this ellipse has a rubber gasket around the edges which acts as a seal and keeps it from scratching the tube. The tube terminates on the speaker side in a 1/2" thick, 12" diameter plexiglas flange. Three 1/2" thick diagonal braces spaced 120 degrees apart run from the flange to the tube to add strength. The upper brace connects to both sloped and horizontal sections of the tube.

Be sure to buy good quality kerosene, perhaps from a chemical supply house. It is slightly more expensive, but the exhibit doesn't use much kerosene and a good quality chemical will cause you fewer headaches in the long run (see Critique and Speculation).

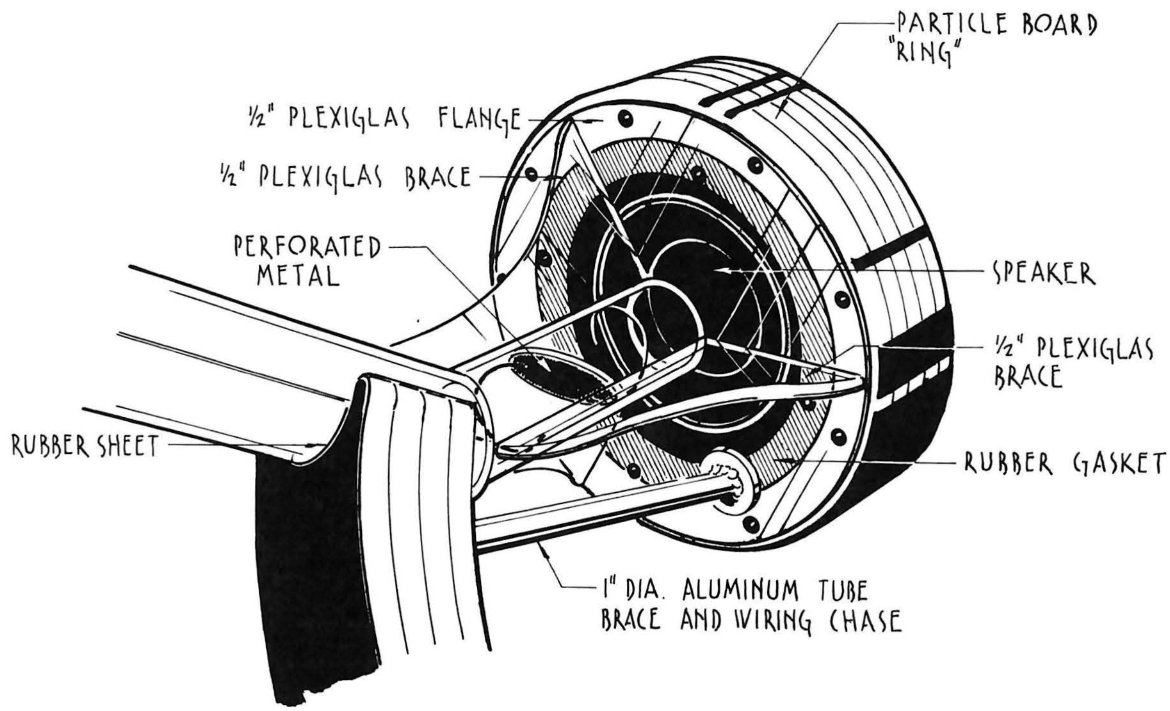

The speaker fits inside a ring of laminated particle board that is 13'' OD, just over 10'' ID (large enough to accommodate the speaker), and 3-3/4'' thick (five layers of 3/4'' board). Both the speaker and the ring screw into the flange. The back end of the speaker is covered with a 10'' diameter plexiglas dome, so the speaker is protected yet plainly visible to the public.

The speaker must be capable of moving large volumes of air, yet fit in a small space. We have chosen an Electrovoice EVM 10M series II, 8 ohm 200 watt musical instrument speaker—a high wattage speaker squeezed into a 10'' diameter. The only drawback to this system is that the speaker tends to disintegrate from exposure to the kerosene and must be re-coned about once a year. (We have tried unsuccessfully to get the manufacturer to make a plastic cone version. We have also tried to paint the cone with silicone rubber paint, only to find that kerosene is an excellent solvent for removing paint from speakers.) The speaker is driven by a variable audio oscillator and amplifier. The variable oscillator (as well as the digital frequency counter mentioned below) is available from:

Jameco Electronics
1355 Shoreway Road
Belmont, CA 94022
telephone: (415) 592-8097

Order the Jameco JE2206B Function Generator Kit—this will supply you with a sine (or square or saw) wave generator. Be prepared to build your own power supply or order one separately from Jameco. We have adjusted our oscillator to produce sound in the frequency range 50 Hz. to 500 Hz. Any amplifier will do, as long as it has the power to drive the speaker—50 watts should do the job. A good source for this would be a PA Amplifier from Radio Shack or another electronics distributor.

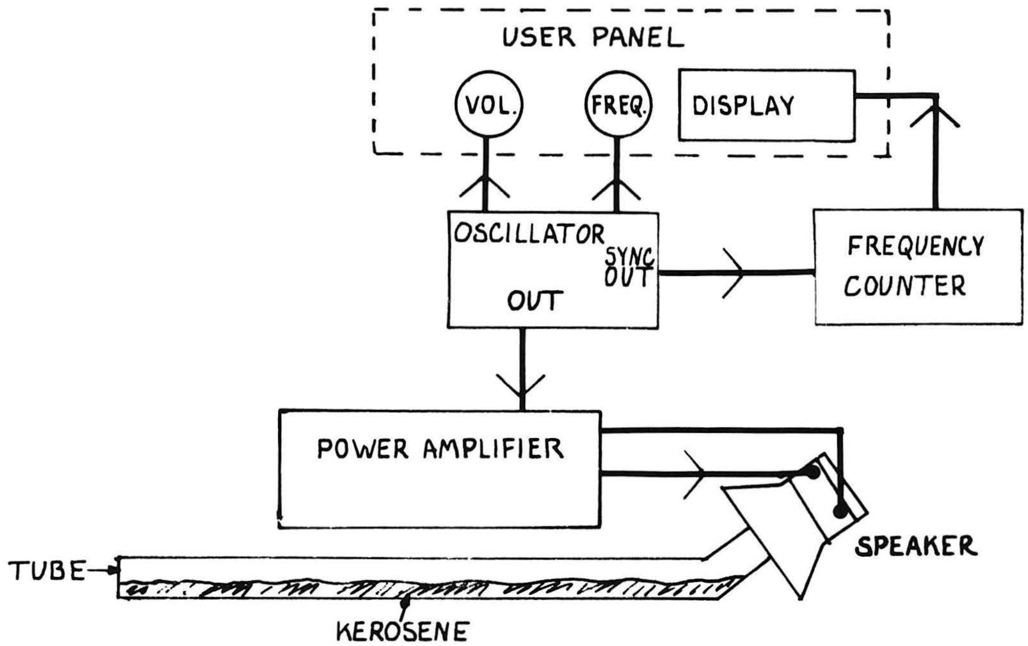

Electronics Block Diagram

It is also necessary to add an equalizer into the system (between the signal generator and the amplifier) to boost the volume at the higher frequencies and suppress it at lower frequencies. High volume at low frequencies causes violent splashing activity that will make the kerosene foam, while too low a volume at high frequencies will result in reduced activity or missing antinodes. An inexpensive equalizer should be available at your local discount stereo supplier.

To make the exhibit a little more quantitative, we added a frequency counter. This allows visitors to see that the liquid fountains occur at multiples of some base frequency. It also enables instructors to use the exhibit as a teaching tool or as a laboratory apparatus for their students. These counters are available from Jameco and are actually a prototyping kit made by Intersil to promote sales of their ''Universal Counter'' chip. Order a Digital Frequency Counter Kit, Intersil #ICM7226AEV/KIT. It sells for about $70.00.

Controls on the front panel let the visitor adjust the volume and frequency of the speaker—we had to do some carving in the amplifier to remote the volume control. The remote controls are 10 turn potentiometers for fine adjustment; both potentiometers have clutch knobs to protect them. The plexi covered frequency counter display is located on the front panel between the two knobs.

The exhibit is lit from above with a 135 watt clear tungsten straight-filament lamp, with the filament aligned parallel to the tube. The clear bulb and relative point-like nature of the filament project nice shadows of the waves onto the exhibit graphics below. Our tube is held in a laminated particle-board structure. It is clamped at one end and rests in a rounded ''fork'' at the other. The tube is insulated from the wood at both ends with a thin (1/32'') rubber sheet. Though our version of the tube-holding structure is aesthetically unique, there's no reason you can't design yours as you see fit.

Critique and Speculation

This exhibit is quite reliable, except that you will have to get the speaker re-coned about once a year, as mentioned above. A small problem with ours is that the kerosene seems to discolor with age and leave a yellowish scum on the inside of the tube. This may be a photochemical reaction—the exhibit stands beneath a skylight—but we're unsure of this hypothesis. We have built another version for IBM which seems to be doing very well so far (10 months of operation). In any event, since you have to repair the speaker once a year, you can clean the tube and change the kerosene while the speaker is out. Isopropyl alcohol removes the scum without too much effort and will not damage the plexiglas (Methanol is a better solvent for difficult cases but may cause the plexiglas to craze).

Visible Effects of the Invisible update

We have replaced the plexiglas tube with a custom-made glass tube crafted by a local scientific glassblower. You can probably find a glassblower in your area by contacting university chemistry departments or research laboratories. If you can't find a local source, call Exploratorium Exhibit Services for a price quote.

This glass tube has solved a variety of problems, including ease of cleaning and durability.

Related Exploratorium Exhibits

Wave Form
Harmonic Series Wheel; Fading Motion; Voice Trace; Sound Column.

Harmonics
Aeolian Harp; Guitar String; Bells; Frequency Excluder; Multiplied Glockenspiel; Violin Tone Color; Voice Trombone; Pentachord.

Surface Tension
Soap Bubbles; Soap Film Painting; Strobe Fountain; Whirling Watcher; Bubbles.

Wave, Standing
Wave Upon Wave; Pipes of Pan; Resonant Rings; Resonator; Vibrating String; Organ Pipe; Walking Beats; Kettle Drum; String Analogy; Air Reed.

Resonance
High and Low Q; Vocal Vowels; Resonant Pendulum; Vibrating String; Resonator; Theremin; Phase Pendulum; Electromagnetic Spectrum; AM Lightning; Electric Pendulum; Coupled Resonant Pendulum; AM Radio.

Exploratorium Exhibit Graphics

Visible Effects of the Invisible

The movement of the liquid in this tube reveals the wave patterns of sound.

To do and notice

Turn up the volume and then turn the FREQUENCY knob until you see the liquid splashing. Notice the speaker mounted on one end of this tube. By turning the FREQUENCY knob, you change the rate at which the speaker vibrates and the frequency or pitch of the sound it produces. The numbers in red show the frequency of the sound.

Find other frequencies at which the liquid splashes. (These frequencies are shown on the chart.) Notice that the location of the splashes changes with the frequency.

Look closely at the splashing. Notice that the liquid sprays up almost vertically. Also notice the small drops that bounce around on the surface. Although they look like bubbles, they are actually tiny droplets of liquid.

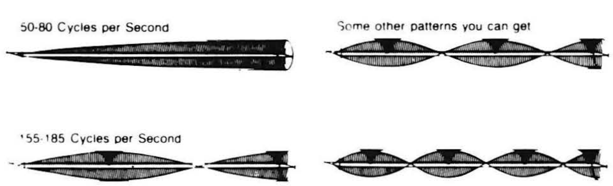

What's going on

As the speaker vibrates, it creates sound waves, pulses of compressed air that travel down the tube, hit the sealed end, and bounce back. At certain frequencies, the waves traveling down the tube reinforce the waves reflecting back, forming a stable pattern known as a **standing wave**. Along such a standing wave, there are places where the air is vibrating rapidly back and forth (**antinodes**), and other places where the air is not moving at all (**nodes**). The liquid splashes at the antinodes, where the air is vibrating rapidly. Because the position and number of antinodes depends on the frequency of the sound, the location of the splashes changes with frequency.

The name of this exhibit comes from the *I Ching* hexagram that states: "The wind blows over the lake and stirs the surface of the water. Thus, visible effects of the invisible are manifested." The idea for the exhibit came from an experiment performed in the late 1800's by German scientist August Kundt (pronounced Koont).

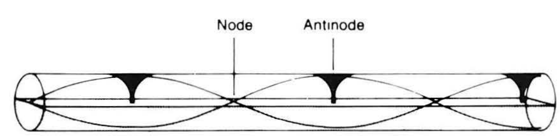

Standing Wave

Speech and Hearing

Sound is vibration. When you speak, the vocal cords in your throat vibrate the air rushing by; these vibrations are further shaped by your throat, nose and mouth. As the vibrating air leaves your mouth, it sets more air vibrating all around you. When these vibrations reach your friend's ear, they are directed into the eardrum, which vibrates three small bones behind it, which in turn vibrate the fluid and membranes of the cochlea in the inner ear—and all of this ultimately gets turned into the electrical nerve responses in the brain that we call hearing. The exhibits in this section demonstrate both the speaking and hearing aspects of sound. In *Vocal Vowels*, for example, the vibrations from a duck call reed are shaped by chambers to form different vowel sounds. In *Delayed Speech* you can experience how confusing it is to hear what you've said a fraction of a second after you've said it. And you can measure the range of sounds you can hear, from very high to very low frequencies, at the *Hearing Range* exhibit.

Speaking and Hearing Exhibits in Cookbooks I, II, and III:

Delayed Speech

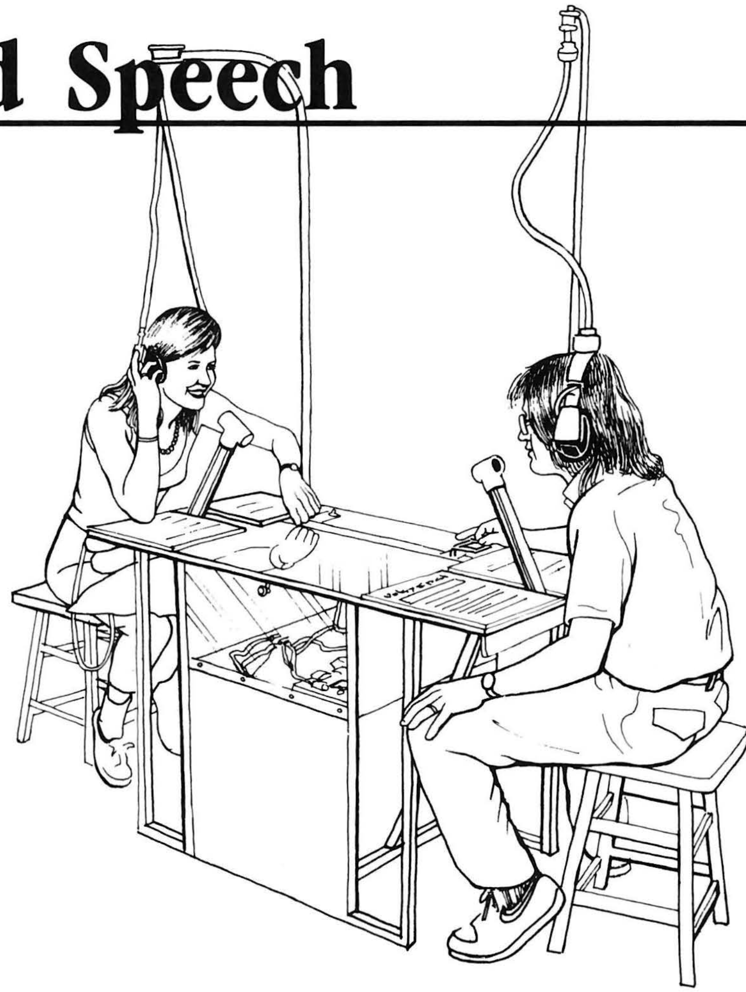

Description

One or two people can talk into microphones and hear themselves in headphones. The playback of their voices is delayed up to 1/5 second (variable). This delay makes it almost impossible for some people to speak intelligibly, since the normal mouth-to-ear feedback mechanism has been tampered with.

Construction

There are several ways that this exhibit can be constructed. We currently use a completely electronic method of delaying the voice. In the past we used a magnetic tape delay system with the record head separated from the subsequent play head. The delay was changed by varying the tape speed. We eventually gave up this system because of tape wear and maintenance.

Our method for electronically delaying the voice is complicated and takes quite a bit of electronic sophistication to build. In recent years complete electronic delay devices, suitable for connection to standard audio systems, have been developed by the musical instrument industry. Not only are these devices already built and ready to use, they are higher fidelity and cheaper than our homebrewed version. These are available in any musical supply store that sells electronic accessories. Ask for an "analog delay line." I have tried one made by Ibanez (model AD9) and have found it eminently satisfactory. These units sell for about $200.00. I have been told by music store people that a digital delay line, although a little more expensive (around $275), provides better fidelity and a longer delay time—up to 800ms as opposed to 400ms for the analog delay line. You will have to open the device up to install an external "delay" potentiometer for the public to adjust, but this should present no great problem.

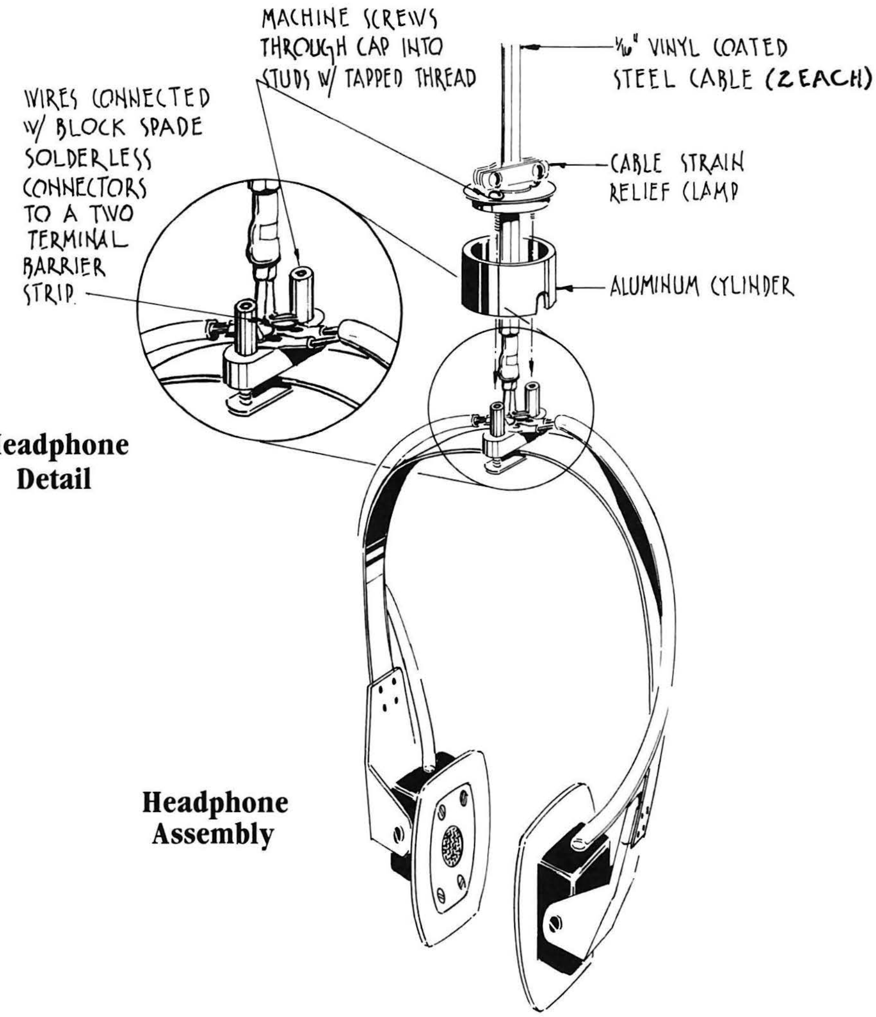

Headphone Detail

Headphone Assembly

The delay device can be installed on a table. Our headphones are hung from bent steel electrical conduit terminated with "pulling elbows." These pulling elbows are standard electrical conduit fittings that allow a strain relief to be screwed into one end, the pipe fixed in the other, with access for wiring connections. The headphones are hung with two pieces of 1/16" vinyl coated steel cable. These cables not only provide a strong support, but are the "wires" that carry the audio signals to the headphones as well.

We have modified the headphones in order to beef them up. The head size adjustment is fixed in place with rivets, and a cylindrical assembly is attached to the top of the headband for connection to the supporting steel cables (see diagram).

Our exhibit lets two people converse at the same time. This seems to enhance the effect and also makes it more fun, since you can share the experience with a friend. We have seen copies of this exhibit where only one person is allowed to talk and listen, and they just don't have the same impact. A simple mixer should enable two people to use the same device; cheap mixers are available from Radio Shack.

Critique and Speculation

Since we have not actually tried using a commercial analog delay device on our floor, we cannot guarantee its longevity in a museum setting. The devices do seem to be built to last and are apparently available in two styles: floor pedal and rack mount. Choose whichever seems more appropriate to your situation.

Related Exploratorium Exhibits

Perceptual Reinforcement
Reverse Distance; Two Boxes with Rod

Time Effects in Perception
After Image; Benham's Disc; Bird in the Cage; Color Reversal; Light Pistons; Magnetic Tightrope; Persistence of Vision; Professor Pulfrich's Universe; Random Dot Stereograms; Depth Spinner; Squirming Palm; Stereo Sound 1 & 2; Hearing Meaning.

Voice and Speech
Pitch Switch; Variable Speech Control; Voice Mirror; Voice Trace; Pygmalion; Speech Dissector; Vocal Vowels.

Delayed Speech

You normally hear what you're saying at the same time that you say it. This exhibit delays your words, so that you hear yourself talking a fraction of a second after you've spoken.

To do and notice

Sit down, put on the earphones, and speak directly into the microphone. You will hear yourself speaking, but each word will be delayed by about 1/8 of a second.

If you can't think of anything to say, have a conversation with a friend at the other microphone or read this sign aloud.

Notice that it becomes difficult to talk at a normal speed. You become confused unless you speak very slowly.

You can vary the delay time by turning the knob while holding the button down.

What's going on

Normally, you continually modify what you say, as you say it. You compare the quality of the sounds you make with those you intend to produce, and you adjust your speech accordingly. This feedback loop, as it is called, seems to be important to the ability to speak coherently.

You also rely on other kinds of feedback to control speech production, such as the vibration of the vocal cords conducted through the bones of the jaw or the movement of the lips, tongue, and teeth. Because of this tactile feedback, people who suffer a loss of hearing are still able to talk, although their speech gradually deteriorates over time.

Doctors sometimes use a delayed speech device to test claims of deafness. If the patient is able to hear, delayed feedback will make normal conversation difficult.

Hearing Meaning

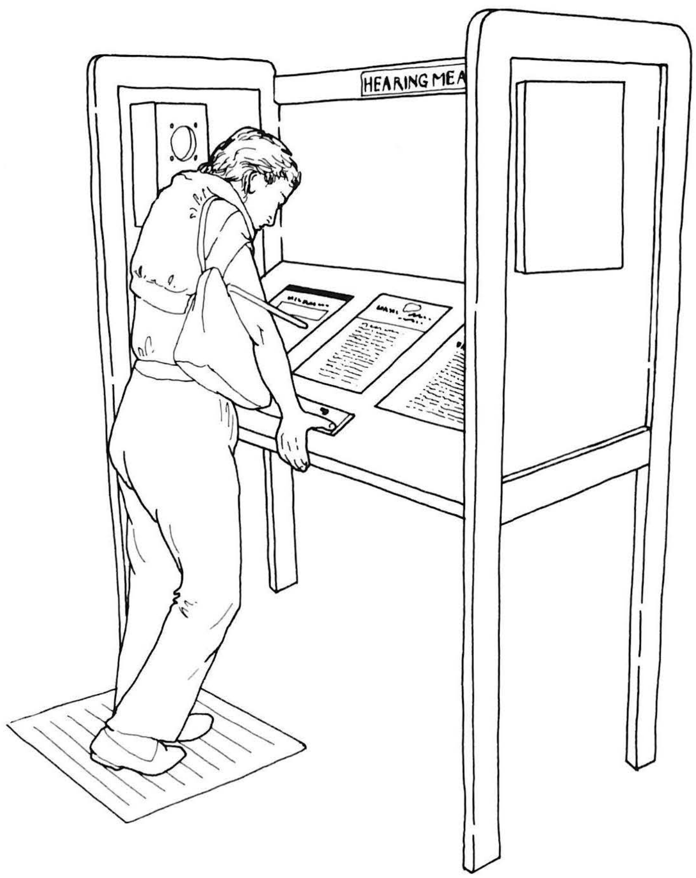

Description

This exhibit in our language section uses three tape decks and a simplified set of controls to explore three different word/sound phenomena. We haven't enclosed the tapes with the Cookbook (feel free to write us for dubs), but we include this recipe because we feel that the control mechanism may be useful to you in any application that requires multiple tape decks.

Construction

Hearing Meaning is really three related but independent exhibits. Since the three tape decks are built into the same structure, it is essential that they be coordinated so that only one of them plays at a time. The three tapes are:

1) Repeating Words: This tape repeats over and over again a single nonsense word. After listening for a while, one begins to hear subtle changes and even other words and sounds.

2) Hearing Missing Sounds: In this tape, parts of words in a sentence are replaced with a cough. In spite of the fact that the sound was physically cut from the tape, listeners still think they hear the missing sound.

3) Slow Speech: Here a short piece of text is read to the listener very slowly. At such a slow pace, the context in which words are used is lost, as is the meaning of the sentence, unless the listener continually repeats the words and builds the sentence as the words accumulate.

The exhibit graphics are given at the end of this recipe.

This exhibit requires some experience with schematics and electronic assemblies. I'll give a brief description of the circuitry; you can figure out the rest from the schematics.

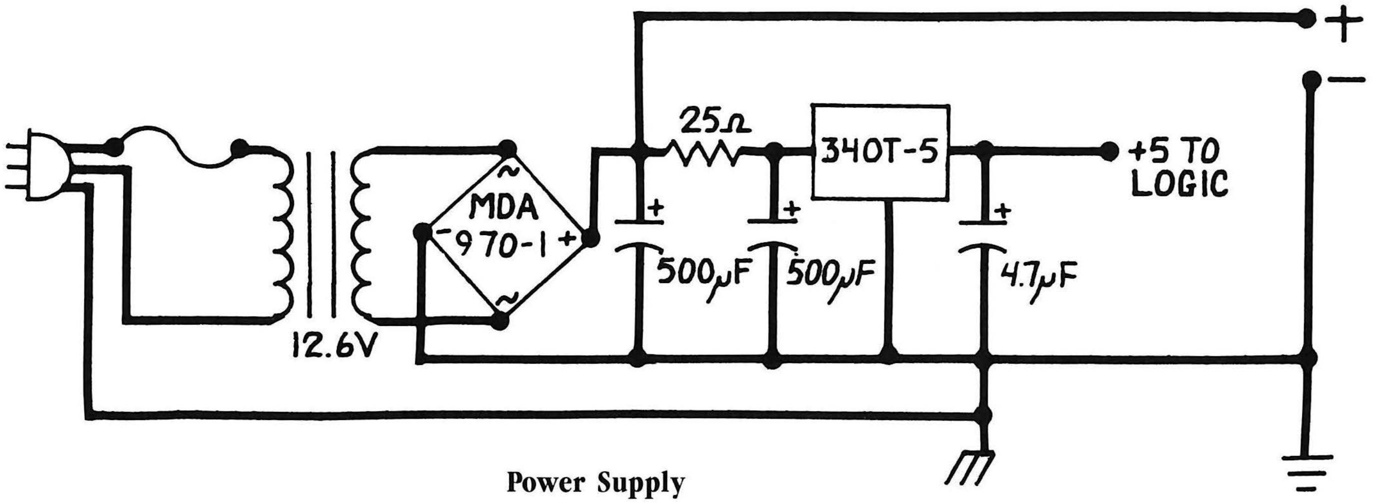

Power Supply

The exhibit consists of several logical blocks:

1) Power supply
2) Tape recorders
3) Tape recorder logic
4) Audio mixer and amplifier

The power supply consists of a standard transformer, a diode bridge rectifier, a capacitor, and a voltage regulator. You can easily build your own or get these from an electronics supplier in your area.

We have chosen a Hitachi model D-E37 tape deck for this and other exhibits. It has an external control connector through which we can control tape motion, and it's CHEAP. It isn't necessary that you use this particular machine, but you'll have to do your own exploring for logic signals if you don't. Please let us know if you find another suitable tape deck—we'd like to have several sources ourselves.

Not all of the signals that we need are available with the connector that comes with the deck, so we've had to do some minor surgery on the machine. Two of the pins on the connector that we didn't need (pause and mute) were cut from the connector, and replaced with signals from the recorder's main control chip (IC201) that light the indicators for "play" and "rewind". These signals are used to light LED's on the front of the exhibit and also for the logic functions (see schematic and modification diagram for the D-E37).

The control circuitry is as in the schematic. As you can see, the circuitry is divided into two parts, that which is common to all tape decks, and that which must be duplicated for each tape deck in the system. Each of the individual tape deck circuits has only 5 chips, one diode, a resistor, and a switch. Our logic is wire-wrapped together. Note that you can connect as many decks as you want to this system even though we only use three.

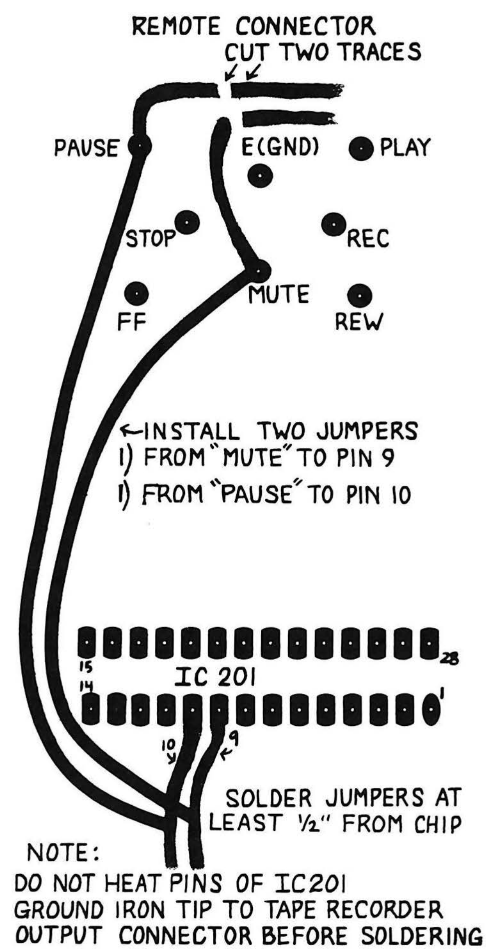

D-E37 Modification

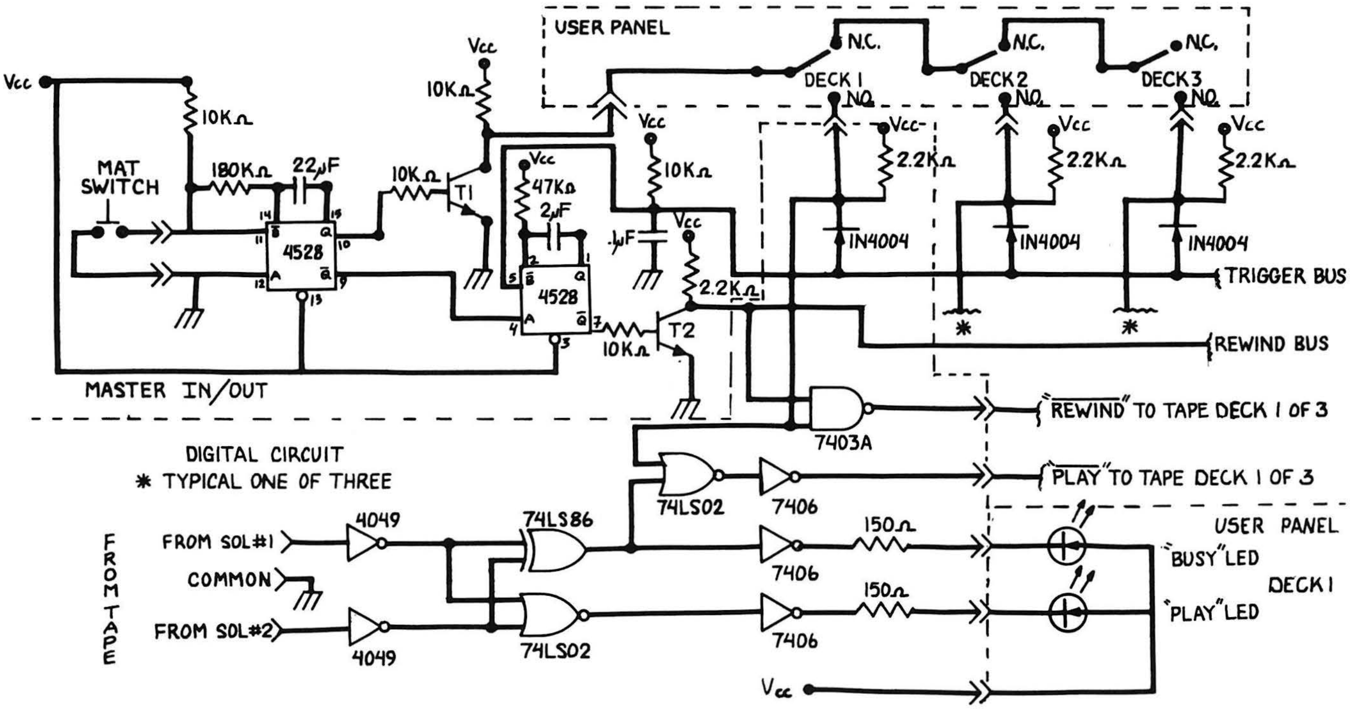

Control Circuitry

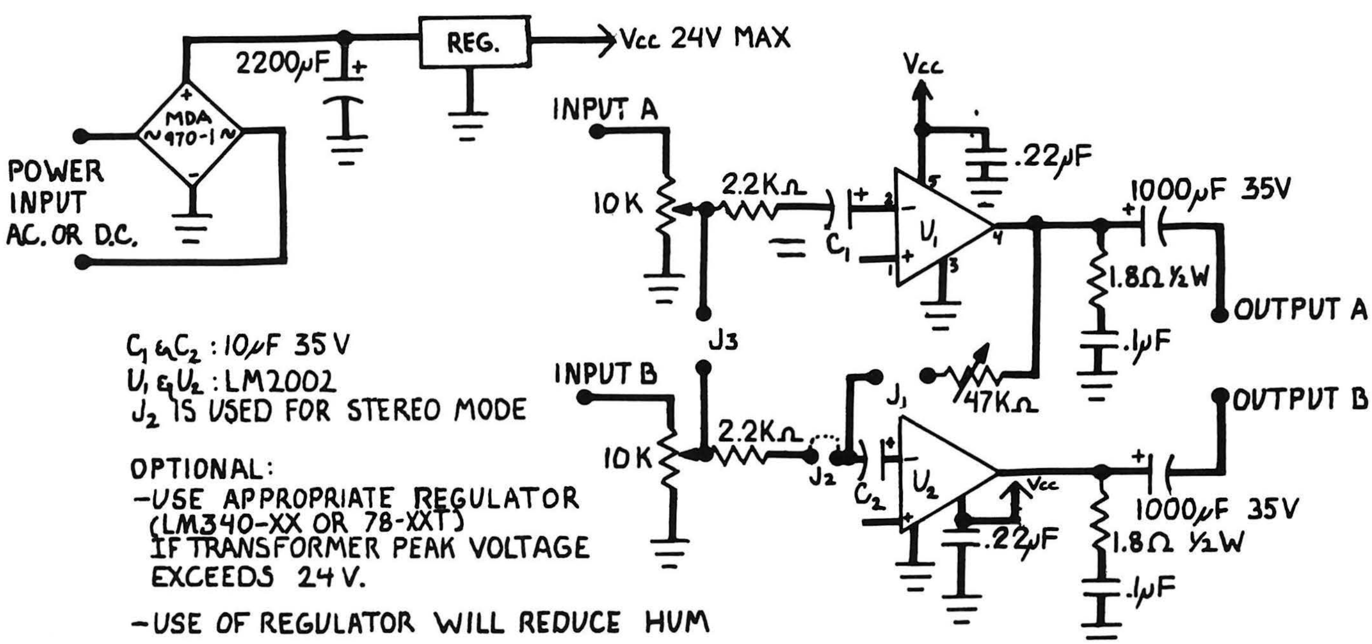

Mixer/Amplifier

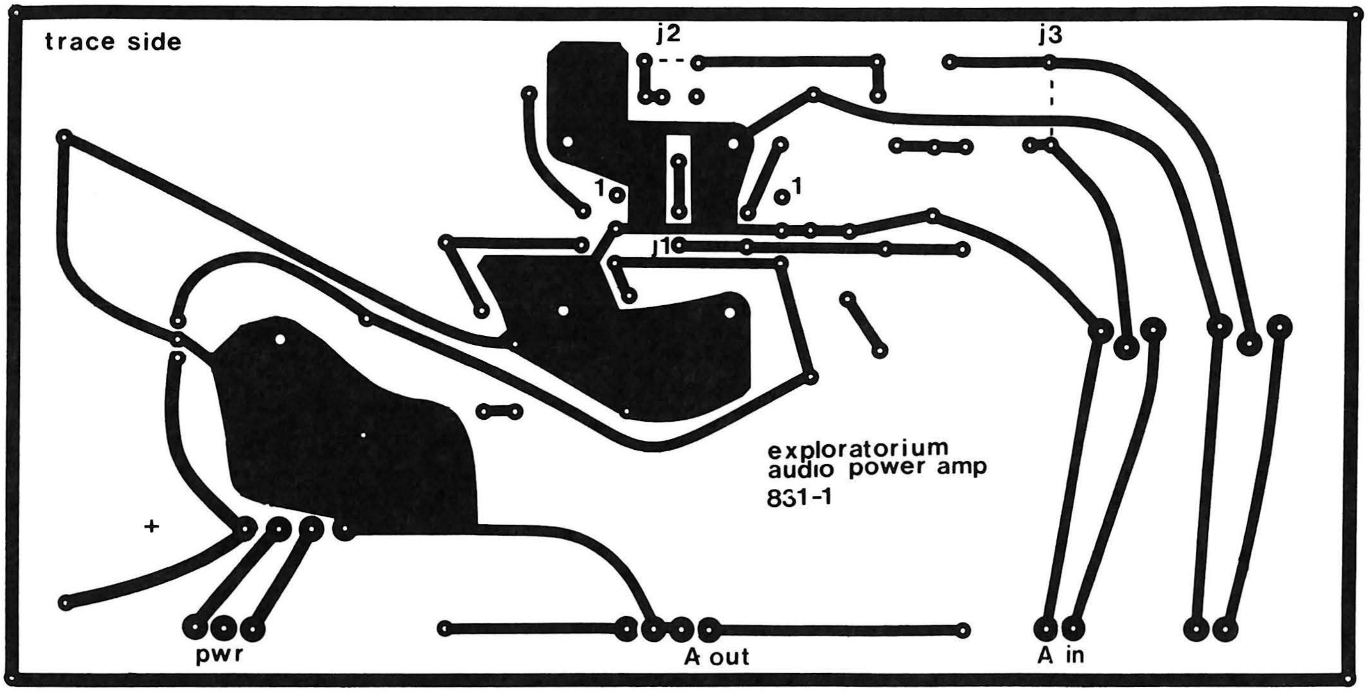

Amplifier PC Layout (Foil Side)

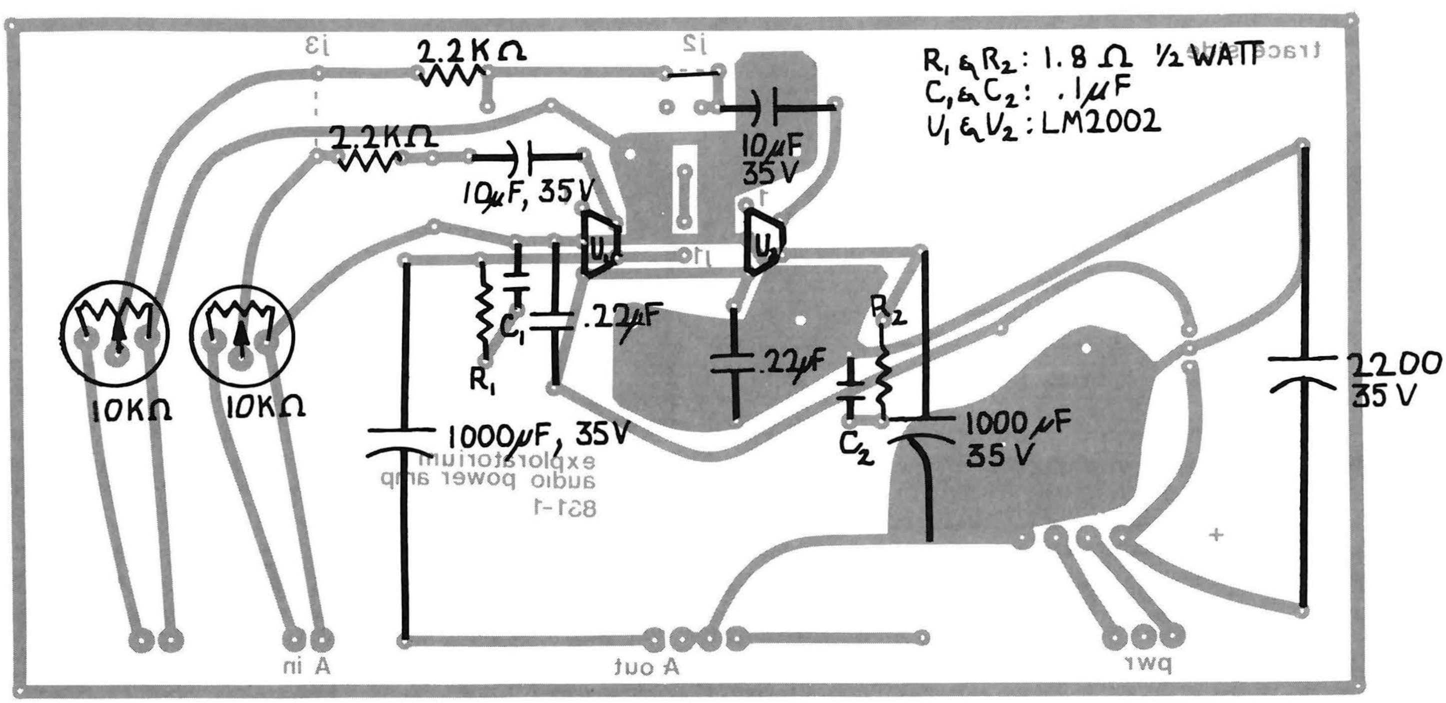

Amplifier Component Placement

Any mixer-amplifier scheme will work for this exhibit; the schematic for ours is given here. This amplifier can be used in stereo or mono mode (mixing the two stereo channels), or can be bridged for four times the power of a single channel amplifier.

The amplifier drives a set of speakers mounted into the walls of the exhibit (see drawing). We've found that the "U" shape of the exhibit blocks out some of the ambient museum noise when the visitor leans in between the speakers. All surfaces of the exhibit are unpainted masonite (see Critique and Speculation).

Critique and Speculation

The tape deck and tapes must be maintained with frequent head cleaning and de-magnetization, and tapes must be replaced periodically. Use a high quality tape or a type specifically designed for heavy usage (some tapes for phone answering machines are designed for this sort of abuse).

External noise can be reduced substantially by covering the inside surfaces of the exhibit with carpeting (we've done this on a later version and it works great).

Related Exploratorium Exhibits

Pattern Recognition

Becalmed; Listening for Letters; Paris in the Spring; Projection; Circles or Spirals; Horse and Cowboy; Old Woman, Young Girl; Resolution; Subjective Contours; Faces or Vases; Lincoln Pictures; Professor Pulfrich's Universe; Speech Dissector; Traffic Illusion; Circular Deformations; Discernibility/Going to Pieces; Lumen Illusion; Inferno; Recollections.

Perception of Meaning

Variable Speech Control; Reaching for Meaning; Links; Missing Links; Language Wall—Meaning and Word Play sections.

Cues, Dominant

Changing Squares; Cows; Distorted Room; Far-Out Corners; Floating Rings; Horse and Cowboy; Impossible Triangle; Reverse Distance; Reverse Masks; Size and Distance; Trapezoidal Window; Cheshire Cat; Reach for It; Cardboard Tube Syllabus.

Exploratorium Exhibit Graphics

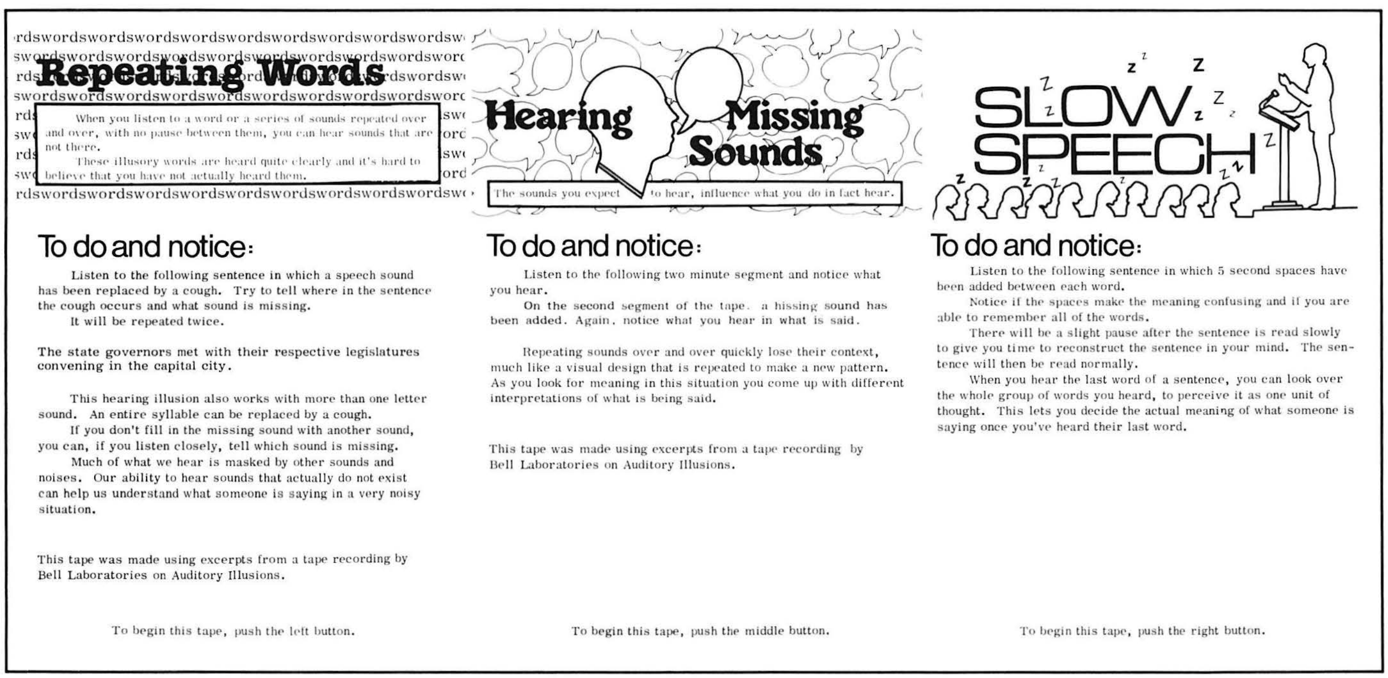

Hearing Range

Description

A tone is played through a set of headphones. The visitor can adjust the frequency of the tone (which is displayed on a digital counter), testing how high or low a frequency he or she can hear. A person's high frequency range varies with age, exposure to loud environments, etc.

Construction

All that is necessary for this exhibit are an audio oscillator, audio amplifier, frequency counter, and headphones.

The headphones are driven by a variable audio oscillator and amplifier. We use a fancy board, designed in-house with a built-in power supply, equalizer, exponential converter and power amplifier. The equalizer insures flat response from the amplifier, while the exponential converter makes it easy for the visitor to adjust the frequency in the higher range (smaller proportional change for a given turn of the frequency potentiometer). A kit with only the oscillator is available from:

Jameco Electronics
1355 Shoreway Road
Belmont, CA 94022
telephone: (415) 592-8097

Order the Jameco JE2206B Function Generator Kit, which will supply you with a sine (or square or saw) wave generator. Be prepared to build your own power supply or order one separately from Jameco. The exponential converter is optional, but you should add the equalizer to make sure the output of the amplifier is flat out to 20,000 Hz.

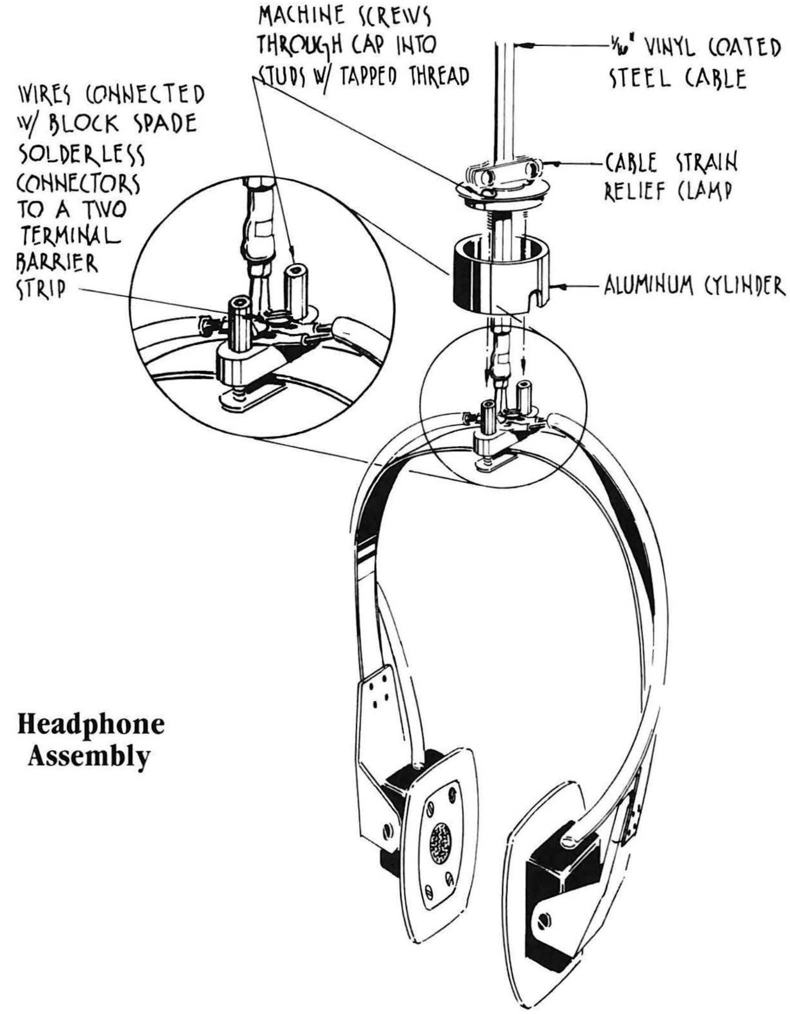

Headphone Assembly

Almost any amplifier will do as long as it will drive the headphones at at least 20,000 Hz, preferably up to 25,000 Hz. You can buy one at your local stereo store. Because the higher frequencies are more difficult to hear, we put a LOUD/SOFT switch on the exhibit below the frequency adjust knob. Although it's not shown in the diagram, we later added a circuit that turns the tone off and on once a second; we thought an intermittent tone would be easier than a constant one to pick out from the surrounding noise of the museum. A simple free running oscillator (1 second period), built from a 555 timing IC, turns an analog switch IC on and off; this latter IC is placed between the equalizer and the amplifier.

A frequency counter kit is also available from Jameco and is actually a prototyping kit made by Intersil to promote sales of their "Universal Counter" chip. Order Digital Frequency Counter Kit, Intersil #ICM7226AEV/KIT.

Our headphones are high quality studio headphones that have excellent frequency response. They are not cheap, but you need a good quality to test people's hearing. We use the kind of headphones that completely cover the wearer's ears, and therefore shut out a substantial amount of external noise. They are hung from bent steel electrical conduit terminated with "pulling elbows"—standard fittings that allow a strain relief to be screwed into one end, the pipe fixed in the other, with access for wiring connections. The headphones are hung with two pieces of 1/16" vinyl coated steel cable, which carry the audio signals to the headphones in addition to supporting them.

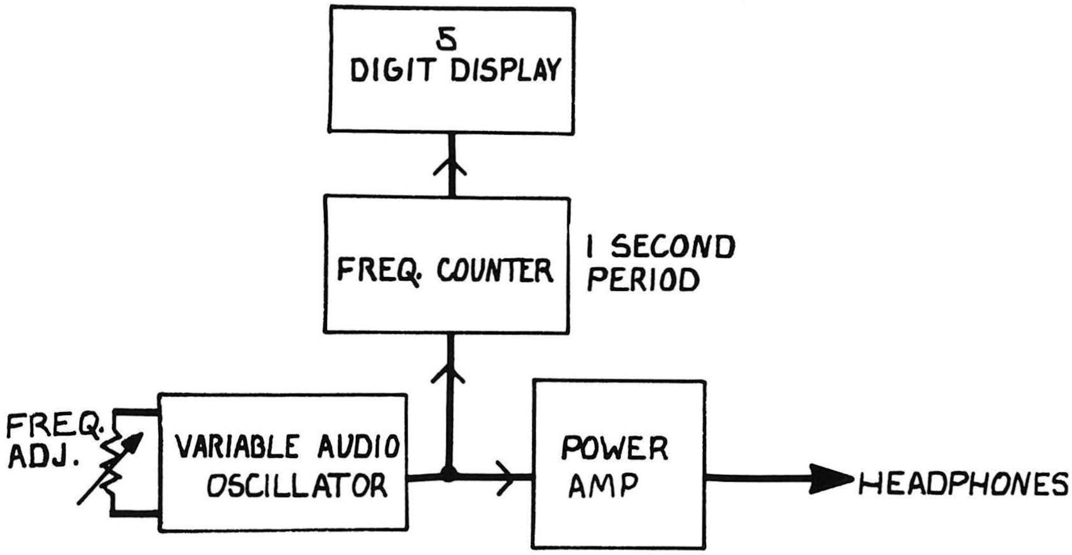

Circuitry Block Diagram

We have modified the headphones to beef them up. Most headphones adjust for different sized heads—we've fixed this adjustment in place with rivets. A cylindrical assembly is attached to the top of the headband for connection to the supporting steel cables (see diagram).

Critique and Speculation

Our version of the exhibit has a built-in seat, which makes it very difficult for people in wheelchairs to use it. We suggest making the exhibit free standing, with a stool for people without wheelchairs.

Related Exploratorium Exhibits

Perception of Sound

Tone Memory; Speech Dissector; Music Box; Two Ways to Look at Sound; Sound Column.

Sound-Audible Spectrum

Vocal Mirror; Echo Tube; Vocal Vowels; Watch Dog; Voice Trombone; Conversation Piece; Voice Trace; Pentachord; Aeolian Harp; Visible Effects of the Invisible; Bells; Air Reed.

Hearing Range

How high and low can you hear?

To do and notice:

Put the headphones on and vary the knob setting from the low frequencies to the high frequencies. Notice the highest and lowest frequencies that you can hear.

At what frequency is the sound the loudest?

What's going on

The sound vibrations produced by the headphones move through the air and strike your eardrum, causing the eardrum to vibrate. The vibrations of the eardrum are transmitted to the fluid of your inner ear by means of very delicate hinged bones.

The vibrations in the inner ear travel through the fluid and stimulate the nerve endings that are distributed along a spiral channel. These stimulated nerves send messages to the brain.

An impairment of hearing can occur any place along this complicated set of mechanisms.

When everything is working well, people can hear sound from 60 vibrations per second to 20,000 vibrations per second.

Sounds vibrating less than 60 vibrations per second can be felt, but they are not recognizable as sounds. Most older people can no longer hear the very high frequency sounds that young people do. Bats and dogs can hear very high frequency sounds that are completely inaudible to humans.

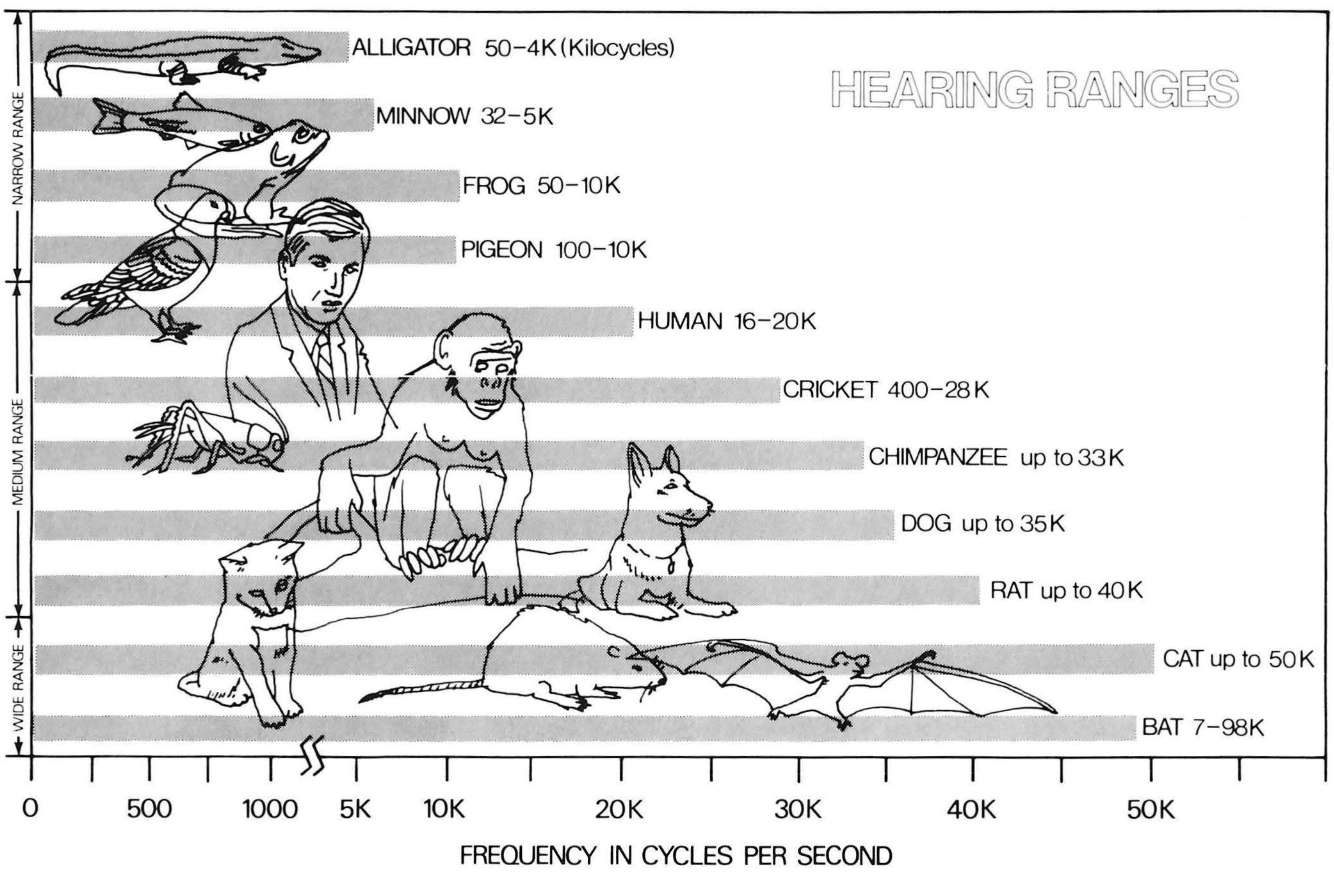

Vocal Vowels

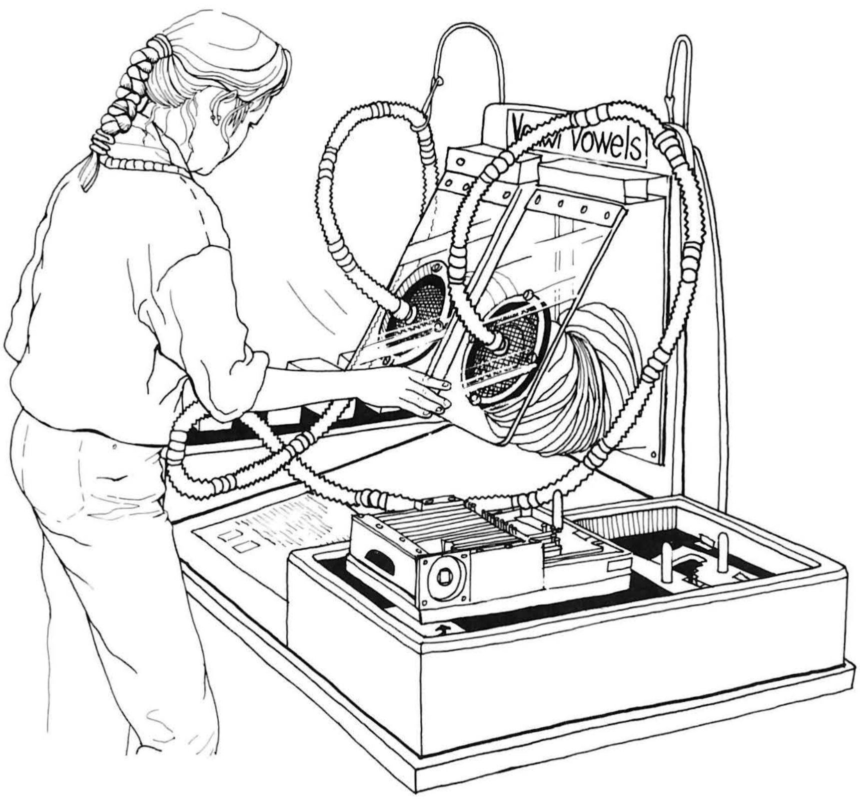

Description

A bellows is compressed to produce a flow of air which is directed into a duck-call, making it quack—just as air from your lungs makes your vocal cords vibrate. Like your vocal cords, the reed of the duck-call produces a complex sound made up of many different frequencies. When the duck-call is placed at the end of one of five plastic models, only some of the frequencies resonate within the contours of the model, and a particular vowel sound is produced. Each of these models mimics the shape of our vocal tract when we make one of the vowel sounds ee, eh, oh, oo, or ah.

Construction

The exhibit centers around the five plastic vocal tract models. Unfortunately, these models are very difficult to make. If you have experience in casting plastics, we used the "lost wax" method of casting our blocks. If you don't know what "lost wax" casting is and wish to try anyway, be prepared to spend several months refining your craft. (Give us a call and we'll be happy to pass along some pointers.) We have included the cross sections of the molds if you want to make them yourself. See the Critique and Speculation section of this recipe for other methods (untested) of fabricating the models. By far the easiest way to obtain these models is to buy them from:

Miami Science Museum
Attn: Eric Speyer, Director
3280 South Miami Ave.
Miami, FL 33129
telephone: (305) 854-4242

The Miami Science Museum sells the models for $200.00 each ($1000.00 for the set of five).

The vocal cord end of each plastic model has a steel plate and plastic positioner into which the duck-call fits. A ring magnet on the duck-call holds it firmly in place on the steel plate.

We have mounted our models on a light-box. The top of the lightbox

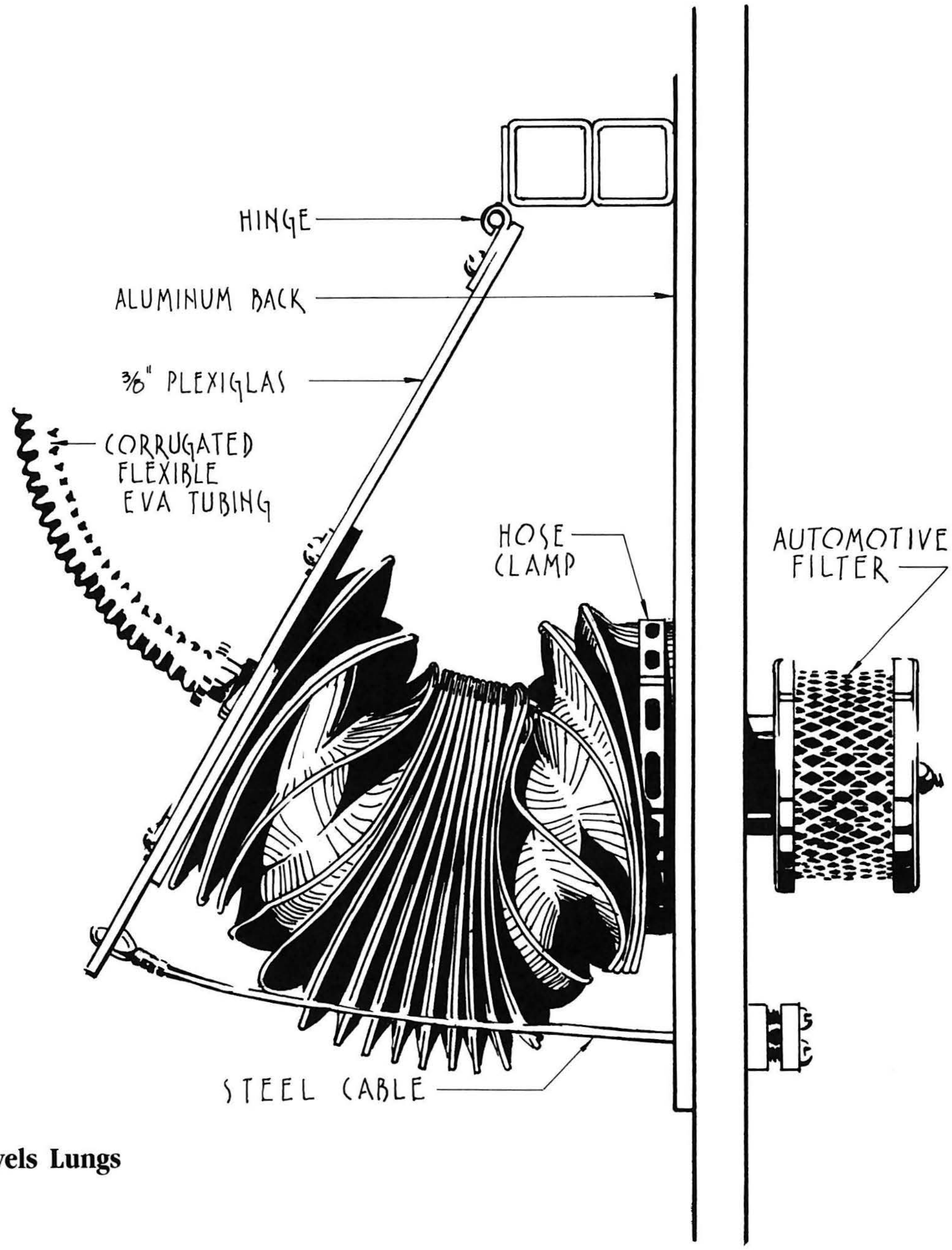

Vocal Vowels Lungs

is blacked out except for the area under the models, making for a rather attractive display. The written vowel sound and a cutaway profile of the vocal tract for that vowel sound are shown next to each model.

The exhibit's lungs are a heavy rubber bellows (Gortiflex CT-6) available from:

A & A Manufacturing
2300 South Calhoun Rd.
New Berlin, WI 53131
telephone: (414) 786-1500

A & A Manufacturing will make a customized bellows for your special needs at a reasonable cost. Our bellows is mounted on an aluminum back plate, with a piece of 3/8" plexiglas hinged to the aluminum and attached to the front end of the bellows for squeezing (see diagram). Air enters the bellows through a standard automotive air filter which sticks out the back of the exhibit; a simple flap-valve provides the one-way action here.

We've put a spring (hand wound from stiff 1/8" diameter wire) inside the bellows to make it bounce back after being compressed. Both ends of this spring are fixed in place with cable tie-downs. The back end of the bellows slips over a ring welded to the aluminum back plate and is hose-clamped in place. The front end of the bellows is passed through an aluminum ring which is bolted to the plexiglas plate. We have found that the life of the bellows is substantially lengthened if you coat the inside of the first few pleats at both ends with Duro "Black Plastic Rubber". This is available at most automotive supply houses. This coating keeps the bellows from cracking at these stress points. Two steel cables run from the lower corners of the plastic plate to the aluminum back, and are crimped in place, so that the bellows can't be pulled open too far.

The hose to the "quacker" fits over a machined plastic nipple on the front plastic plate and is held in place with a split-ring clamp. Our hoses are corrugated flexible E.V.A. tubing 3/4" ID and 72" long, available from:

Inspiron
Division of C. R. Bard, Inc
161 North Mountain Ave.
Upland, CA 91786

You can probably order this tubing through your local medical supply house. Order #001520.

The plastic tubing leads to a specially built duck-call (see cut-away). We buy the reeds from:

Black Duck
1737 Davis Avenue
Whiting, IN 46394
telephone: (219) 659-2997

We use the reed from the W-1010 duck call. If you wish to buy the reeds only, contact the president of the company, Mrs. Mehok. Since we have two quackers on our exhibit we made a higher (female) and lower (male) quacker.

On the right-hand side of the exhibit is a variable vocal tract. The construction details of this would be extremely difficult to describe since it is the result of many remakes and modifications. But here's the general idea: The cavity is made by sandwiching two 1/2" thick pieces of glass (the glass must be thick to keep it from radiating sound) with 2 cm. thick spacers between them. Stacked plastic slats, 1/4" thick and 2 cm. wide, are used to vary the contour of the cavity. These slats have small screws for handles at one end, and are made from strips of plexiglas and delrin, alternated to reduce friction. The vocal cord end has the same "quacker holder" as the plastic blocks. We have provided templates, made from 1/4" aluminum, which can be placed against the plastic sliders and act as guides to position the strips for various sounds. By putting a handle on the face of each template, and a notch in one corner (which matches a corresponding protrusion in the space where the template fits), we assist the user in positioning the template properly. The plastic slats can be slid against a template to match its profile; or you can move them without template guidance, testing various shapes and their corresponding sounds.

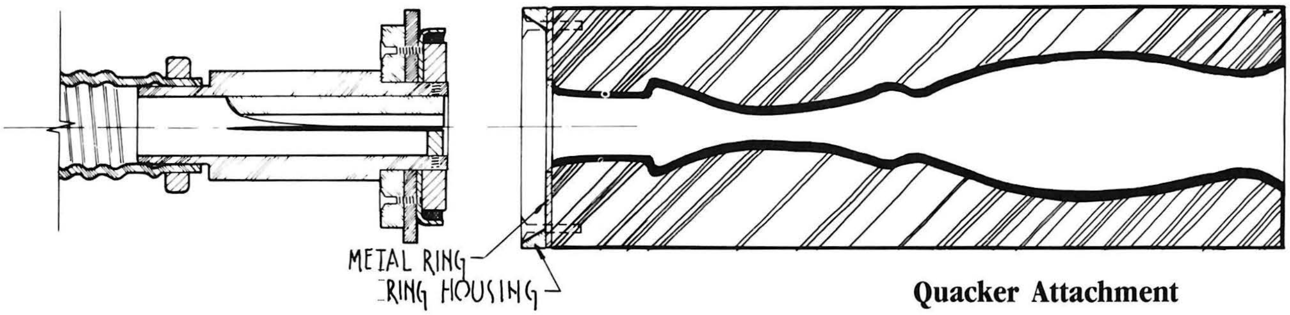

Quacker Attachment

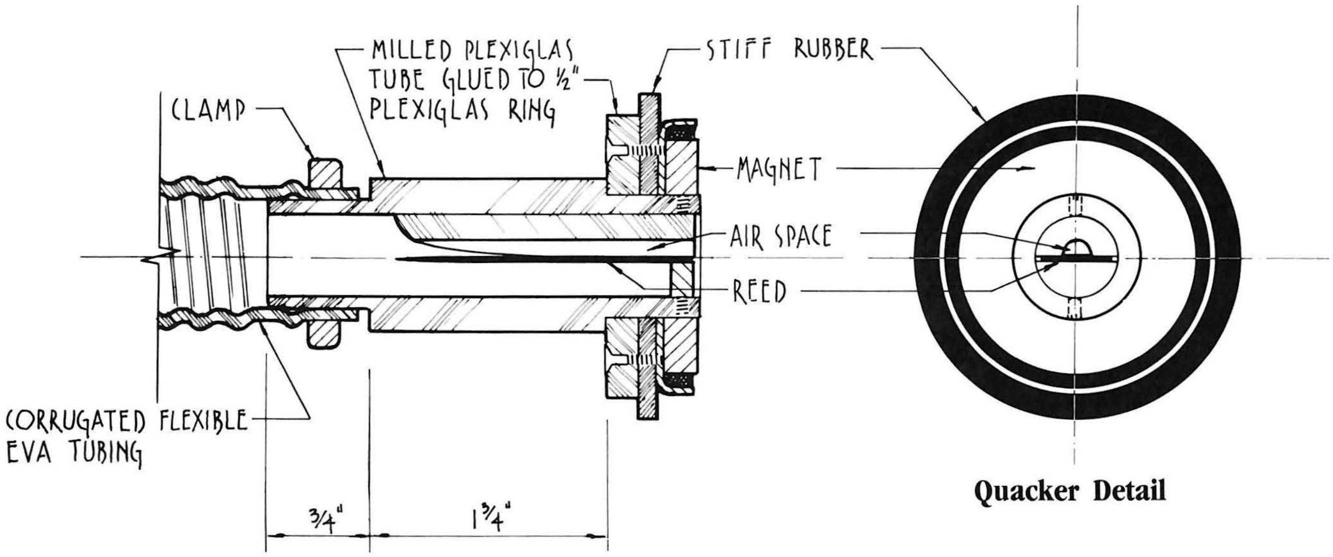

Quacker Detail

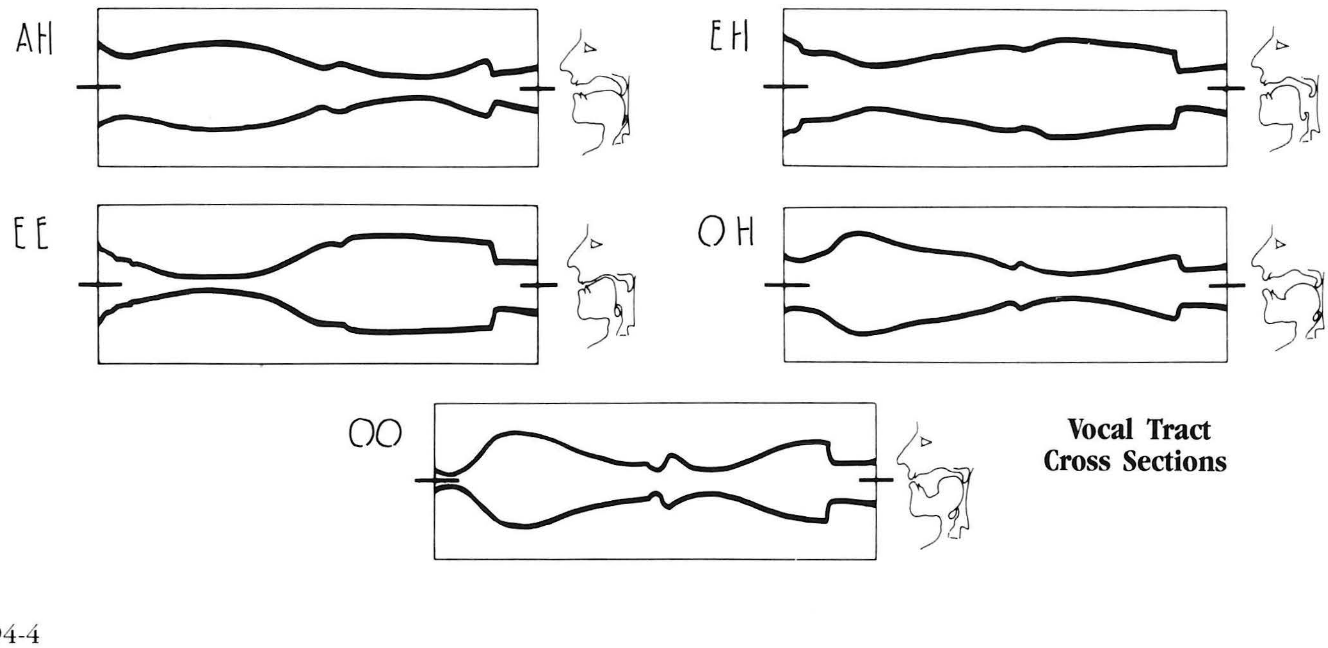

Vocal Tract Cross Sections

Critique and Speculation

Here are two other possible (but untested) ways to make the vocal tract models:

1) Clay: Using the dimensions of the vocal tracts, make a series of clay doughnuts of the appropriate diameters and assemble them into a tube of (approximately) the correct contours
2) Plexiglas stack: Machine a stack of 1/4'' thick plexiglas squares with holes whose diameters match the varying widths of the needed profile. Solvent cement the stack together, and you've made your clear model a lot faster than we made ours.

Related Exploratorium Exhibits

Voice and Speech

Pitch Switch; Variable Speech Control; Vocal Mirror; Delayed Speech; Voice Trace; Voice Trombone; Speech Dissector.

Resonance

Coupled Pendulums; High & Low Q; Resonant Rings; Resonator; Visible Effects of the Invisible; Voice Trombone; Aeolian Harp; Sound Column; Pipes of Pan; Pendulums.

Exploratorium Exhibit Graphics

Vocal Vowels

These plastic models turn the squawk of a duck call into vowel sounds.

To do and notice

Press on the bellows. The sound you hear is made by the reed from a duck call.

Insert the end of the hose into the hole in one of the clear plastic vocal tract models. Press on the bellows again. Try the other models and compare the sounds.

Compare the shapes inside these models with the pictures at the left. The pictures show the shape of your vocal tract, the cavity formed by your mouth and throat, when you say different vowels.

You can adjust the model at the right to make different sounds. Insert the hose in the model, move the individual slats up or down, press the bellows and listen to the sound. Change the position of the slats and notice how that affects the sound.

Use the aluminum templates to arrange the slats and make specific vowel sounds. Or try shapes like these:

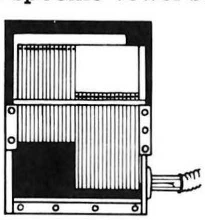

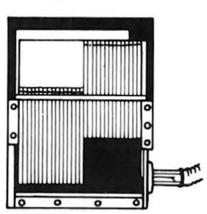

What is going on

The chamber of each plastic model is shaped like the human vocal tract. When you say different vowels, you change the shape of your vocal tract. That's why each model is a little different from the others.

A puff of air from the bellows makes the reed in the end of the hose vibrate, just as the air from your lungs make your vocal cords vibrate. Like your vocal cords, the vibrating reed produces a complex sound composed of many different pitches.

Like your vocal tract, the plastic models shape these complex sounds to make particular vowel sounds. When the complex sound echoes from the walls of the plastic cavity, some pitches are reinforced and some are not. The process of reinforcement and cancellation of certain pitches changes the squawk of the duck call into a recognizable vowel sound.

Language Wall

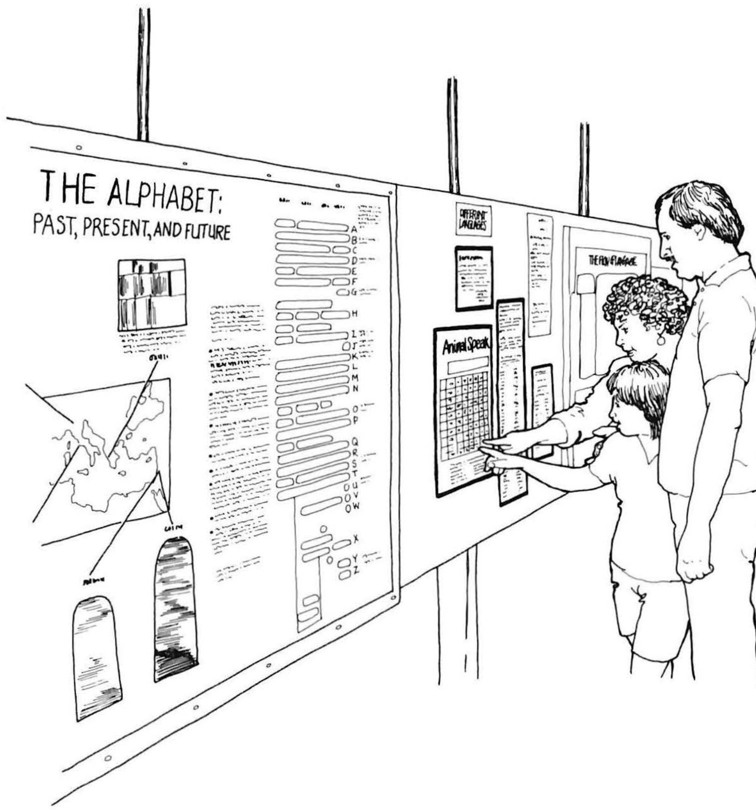

Description

As a part of our exhibit section on Language we have a large wall area called (you guessed it) *Language Wall*, on which a number of language phenomena presented in graphics. The Exploratorium is known for its "hands-on" exhibits; we believe words and graphics can also be presented in an accessible, lively, and interactive manner. Included with this recipe are some of the graphics on the wall that have proved useful and involving.

Construction

The wall is a 20' long, 42" high panel, raised 30" off the floor. We use both sides of the panel, and have divided the total surface into four main subject areas: Origins, Different Languages, Meaning, and Word Play. In each of these areas there is a variety of graphic examples of ideas we've developed ourselves, received from friends, or culled from books, museums, and other sources. The wall area is large enough to allow for occasional additions.

We wanted to arrange the wall in such a manner that visitors aren't overwhelmed by quantities of text. Our solution has been to present each idea as a discrete unit on the wall, so that people may approach the wall at any point and easily tune in to and understand a single item. If they then want to look at more, they can peruse some of the related ideas in the same subject area. This makes the wall less formidable and more inviting, and it is common to see visitors (mostly adults) spend a great deal of time reading and discussing the language ideas.

The smaller graphics are laminated and attached with double-stick tape, while larger panels are covered with 1/8" plexiglas and either hung or screwed into the wall.

The following examples of Language Wall graphics are included at the end of this recipe:

Origins
The Alphabet: Past, Present, and Future

Different Languages
Animal Speak
Three Poems/Nine Poems

Meaning
Alice in Wonderland (Humpty Dumpty panel)
Metaphor in Blue

Word Play
Sound Shapes (Kratchak/Loomanlah)
Color Words

Critique and Speculation

The smaller graphics are mounted with double-stick tape that eventually becomes unstuck. Our reason for using this method was to make it easy to add new graphics to the wall and move the old ones around. However, the maintenance of these graphics has proven more of a problem than the advantage of the double-stick: edges curl, and they look pretty dirty. Our present plan is to mount several of the graphics on a larger board, cover it with plexiglas, and then attach it to the wall. Hopefully this will solve the maintenance problem without interfering with the arrangement and accessibility of the exhibit.

Related Exploratorium Exhibits

Cues, Dominant

Changing Squares; Cows; Distorted Room; Far-Out Corners; Floating Rings; Horse and Cowboy; Impossible Triangle; Reverse Distance; Reverse Masks; Size and Distance; Trapezoidal Window; Cheshire Cat; Reach for It; Cardboard Tube Syllabus; Hearing Meaning.

Cues, Ambiguous

Circles or Spirals; Circular Deformations; Everyone is You and Me; Faces or Vases; Lincoln Pictures; Old Woman or Young Girl; Reach for It; Two Boxes with Rods; Two Weights; Cardboard Tube Syllabus; Professor Pulfrich's Universe; Inferno.

Perception of Meaning

Variable Speech Control; Reaching for Meaning; Links; Missing Links.

Pattern Recognition

Becalmed; Listening for Letters; Projection; Henri Rousseau's Exotic Landscape; Resolution; Subjective Contours; Anti-Gravity Mirror; Speech Dissector; Traffic Illusion; Discernibility/Going to Pieces; Lumen Illusion; Spinners; Recollections.

Language Comparisons

Dialects; What Do You Call It?; Language Impressions; Languages of the World; Harpin Boont; Language Family Trees; Speaking Other Languages.

Origins

THE ALPHABET:
PAST, PRESENT, AND FUTURE

This ivory tablet (actual size 2"×3.4") was probably used by a child of the 7th century B.C. to learn the early Etruscan alphabet. It is written from right to left across the top.

This Greek inscription from about 500 B.C. gives an ancient code of laws. It is written in the boustrophedon style, in which the direction of writing is reversed in every other line (see "The Flow of Language" exhibit).

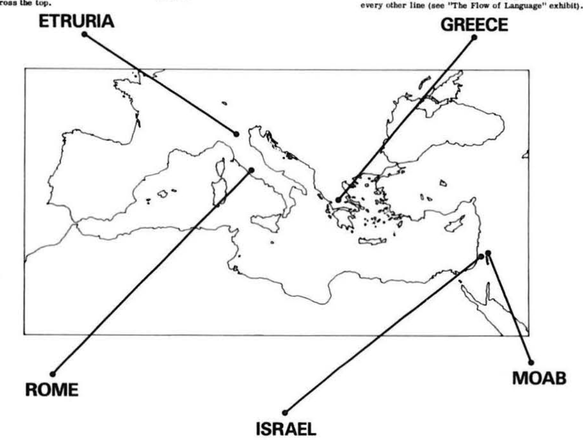

The chart at right traces the development of modern capital letters from some of the earliest known alphabets of the ancient Middle East. In some respects, (particularly in the order of the letters) the alphabet has remained remarkably unchanged for the past 3000 years. The main changes have been in the shapes and sound values of some of the letters.

Some things to notice:

Since different languages use different sounds, when an alphabet originally developed for one language was used to write down another, some changes were usually necessary. All the letter forms on a single blue band stand for the same sound. The breaks between blue bands on a single horizontal row show where the sound of a letter changed.

There are four ways to tell the sound values of the letters:

1. The sound which each of the Semitic letters stand for is the same as the sound which begins the letter's name (written above each Semitic letter in the chart). For example, the letter yod has the sound of our letter Y. The letters 'aleph, ḥeth, ṭeth, and 'ayin stand for throaty consonant sounds not used in English.

2. The sound value of each of the Greek letters is also given by the beginning of its name (written above each of the Greek letters in the chart). For example, the letter theta has the sound of our letters TH. The only exception is digamma which stood for a W sound.

3. Letters which lie on the same blue band as a modern English letter stand for the same sound as the English letter.

4. In some cases, the sound of an Etruscan letter is shown by a small English letter in parentheses next to it.

The Semitic letter names are also the Semitic names of common objects (in parentheses next to each Semitic letter name). Many of the letters look something like the objects which share their names, and this has led to many theories of a pictographic origin for the alphabet. For example, the letter 'aleph (which means ox) looks a bit like the head of an ox.

The Greek letter names are based on the Semitic names and do not mean anything else in Greek.

The Greeks were the first to include vowels in their alphabet. They used the Semitic letters 'aleph, he, ḥeth, yod, and 'ayin (which stand for sounds not used in Greek) for the vowels a, ĕ, ē, i, and ŏ. They also adapted a form of the Semitic waw to stand for u and added the letter omega for ō.

The information in this chart comes mainly from The Alphabet, by David Diringer (London, 1968).

Different Languages

Animal Speak

	Dog	Cat	Pig	Rooster	Horse	Sheep	Duck
English	BOW WOW	MEEOW	OINK	KAH KAH DOODEL DOO	NAY	BAH	KWAK
Mexican	WOW WOW	MEEOW	KOINK	KEE KEE REE KEE	EE EE EE	BEH	KWAH KWAH
French	OH WAH	MEEOW	GRR	KOH KOH REE KOH	HEHN	BEH	KWAN
Hebrew	OW WOW WOW	MEEOW	NO PIGS	KOO KOO REE KOO	HEE EE	BEH	KWAH KWAH
Japanese	WAHN WAHN	NEEAH	BOO BOO	KOH KAY KOH KOH	HEE EE EE	MEH EH EH	KWAH KWAH
Chinese	FIEE	MIEE	OOH	KOK KOO	GJEE TEE	MEH	KWAH KWAH
Croatian	AHV AHV	MEEOW	ROKE ROKE	KOO KOO REE KOO	EE EE EE	BAY BAY	KWAH KWAH
Hungarian	VOW VOW	MEEOW	ROHF ROHF	KOO KOO REE KOO	NYI HAH HAH	BAA AA AA	HAP HAP
Arabic	VOGH VOGH VOGH	MEEOW	NO PIGS	GHOO GHOOR	EE EE	BAA BAA	RARE ANIMAL
Russian	GAHF GAHF	MEEOW	KITRROO KRROOK	KOO KOO REE KOO	YEE EE EE	BEH EH EH	KRYA KRYA

Compare the similarities and differences of what the animals "say" in each of the languages below.

Notice that the sounds are at times characteristic of the language they are from. For example, the sound a dog makes to a french person ("oh wah") sounds more like french than english.

Each language is made up of sounds and sound sequences that are characteristic of that language. This extends into non-language sounds as well.

Different Languages

THREE POEMS/NINE POEMS

- Notice the difference in each translation of the original poem. The titles are even different. It is almost like reading nine different poems.
- If you speak the language of the original poem, compare your interpretation with the translation.

Translations are rarely a simple one-to-one matching of words from one language to another. The meaning each word carries with it may not have an exact match in another language. The ambiguities in this translation process are clearly seen in these poetry examples.

The very personal way a poet uses language to evoke certain feelings, tones and rhythms, make the process of translation more of a personal interpretation by each translator.

Much of the power of poetry comes through the imagery created in the mind of the reader. Can you detect differences in imagery that each translator is trying to convey through their choice of words?

Below are excerpts of three poems, each with two different translations. The first two poems were written in Spanish by Pablo Neruda. The third poem was written in German by Rainer Maria Rilke.

CÓMO ERA ESPAÑA

Era España tirante y seca, diurno
tambor de són opaco,
llanura y nido de águilas, silencio
de azotada intemperie.

EXPLICO ALGUNAS COSAS

Preguntaréis: Y dónde están las lilas?
Y la metafísica cubierta de amapolas?
Y la lluvia que a menudo golpeaba
sus palabras llenándolas
de agujeros y pájaros?

Os voy a contar todo lo que me pasa.

Pablo Neruda

HOW SPAIN WAS

Arid and taut—day's drumskin,
a sounding opacity: that's how Spain was:
an eyrie for eagles, flat-landed, a silence
under the thong of the weathers.

A FEW THINGS EXPLAINED

You will ask: And where are the lilacs?
And the metaphysics muffled in poppies?
And the rain which so often has battered
its words till they spouted up
gullies and birds?

I'll tell you how matters stand with me.

Translated by- Ben Belitt

WHAT SPAIN WAS LIKE

Spain was tense and lean, a daily
drum of opaque sound,
plainland and eagle's nest, silence
of scourged inclemency.

I EXPLAIN A FEW THINGS

You will ask: And where are the lilacs?
And the metaphysical blanket of poppies?
And the rain that often struck
your words filling them
with holes and birds?

I am going to tell you all that is happening to me.

Translated by- Donald D. Walsh

EINGANG

Wer du auch seist: am Abend tritt hinaus
aus deiner Stube, drin du alles weisst;
als letztes vor der Ferne liegt dein Haus:
Wer du auch seist.
Mit deinen Augen, welche müde kaum
von der verbrauchten Schwelle sich befrein,
hebst du ganz langsam einen schwarzen Baum
und stellst ihn vor den Himmel: schlank, allein.
Und hast die Welt gemacht. Und sie ist gross
und wie ein Wort, das noch im Schweigen reift.
Und wie dein Wille ihren Sinn begreift,
lassen sie deine Augen zärtlich los . . .

Rainer Maria Rilke

INITIATION

Whoever you are, go out into the evening,
leaving your room, of which you know each bit;
your house is the last before the infinite,
whoever you are.
Then with your eyes that wearily
scarce lift themselves from the worn-out door-stone
slowly you raise a shadowy black tree
and fix it on the sky: slender, alone.
And you have made the world (and it shall grow
and ripen as a word, unspoken, still).
When you have grasped its meaning with your will,
then tenderly your eyes will let it go . . .

Translated by- C.F. MacIntyre

PRELUDE

Whoever you are: at evening step forth
out of your room, where all is known to you;
last thing before the distance lies your house:
whoever you are.
With your eyes, which wearily
scarce from the much-worn threshold free themselves,
you lift quite slowly a black tree
and place it against the sky: slender, alone.
And you have made the world. And it is large
and like a word that yet in silence ripens.
And as your will takes in the sense of it,
tenderly your eyes let it go . . .

Translated by- M.D. Herter Norton

"When *I* use a word," Humpty Dumpty said, in rather a scornful tone, "it means just what I choose it to mean—neither more nor less."

"The question is," said Alice, "whether you *can* make words mean so many different things."

"The question is," said Humpty Dumpty, "which is to be master—that's all."

Alice was too much puzzled to say anything; so after a minute Humpty Dumpty began again. "They've a temper, some of them—particularly verbs: they're the proudest—adjectives you can do anything with, but not verbs—however, *I* can manage the whole lot of them!"

METAPHOR IN BLUE

The Blues
To Be Blue
Blueblood
Out of the Blue
Talking a Blue Streak
Something Borrowed, Something Blue...
Blue-Line Copy
Blue Ribbon
Bluegrass Music
Blue-Collar
Blue-Jeans
Blue Nose
Blue Note
Blue Movies
Blue Laws
True Blue
Blue-Sky Law
Blue Chip
Blue Book
Blue Stocking

Some of these metaphors of blue came from other countries, such as "blueblood" from the term in Spain "sangreazul" which meant to have no Jewish or Moorish blood thus making your veins look blue because of your fair skin.

However, if you said you were blue to someone in Germany they would think you were drunk, in France it would mean you were angry.

SOUND SHAPES

Specific letter sounds can "fit" with specific shapes.

Which shape should be called a KRATCHAK and which a LOOMANLAH?

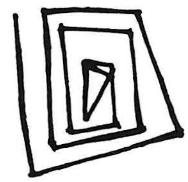

Almost everyone immediately says that

 is a Kratchak and

 is a Loomanlah

The hard consonant sounds of Kratchak evoke hard angle edges, and the smoother consonant sounds in Loomanlah correspond to smooth lines and curves.

Color Words

Words exert a strong influence on the way you see things. What happens when you get two different messages, one visual, and one linguistic all at the same time?

To Do and Notice:

- Say out loud the color of the ink each of these words are written.
- Notice how strong the influence of the written name is over the actual color of the word.

RED GREEN YELLOW ORANGE PINK BLUE GREEN
PURPLE RED BROWN BLACK ORANGE BLUE GREY
PINK RED GREEN GREY MAGENTA BLUE GREEN
BLACK ORANGE GREY YELLOW PURPLE ORANGE

Note: The words in "Color Words," above, are each written in a color other than the word itself; i.e., the word "RED" might be written in green; the word "GREEN" in yellow, etc.

Neurophysiology

Exhibits in this section explore aspects of the physiology of perception—specifically, nerve response physiology. These exhibits demonstrate ways in which living organisms receive, interpret, and respond to information from their environment. For example, in *Reaction Time* you can measure how quickly you respond to (and grab) a falling stick. In the *Garden of Smells* you can see how you fare at perceiving and then recognizing different scents. It is interesting to note how limited our vocabulary is in naming or identifying smells, compared to our vocabulary for other sensory stimuli.

Neurophysiology Exhibits in Cookbooks I, II, and III:

Recipe No. 196

Garden of Smells

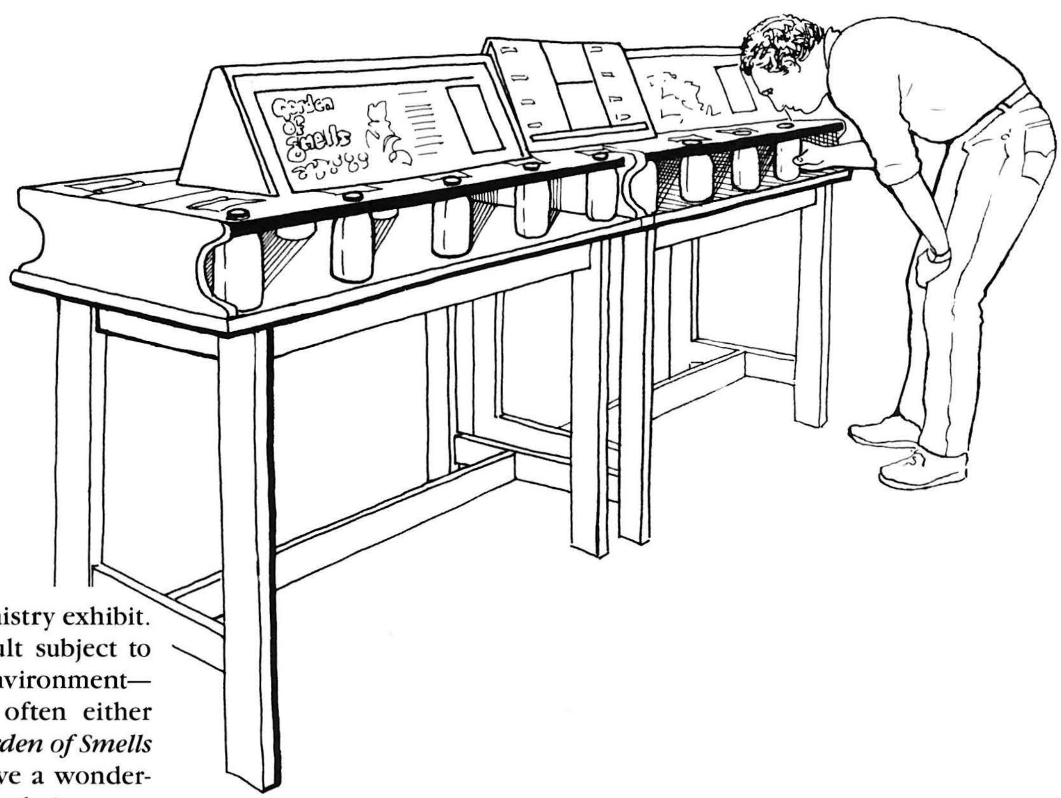

Description

This is primarily a chemistry exhibit. Chemistry is a very difficult subject to deal with in a museum environment—interesting chemicals are often either dangerous or corrosive. *Garden of Smells* shows people that they have a wonderful chemistry laboratory in their noses, capable of detecting subtle differences in the physical structure of molecules.

Unlike insects, whose smell receptors are programmed to detect and respond to only a few specific odors, people have a complex smell mechanism that can distinguish thousands of different scents. Though we do not rely on our sense of smell as heavily as do some other animals, we do use it to warn us of the presence of hazardous substances, to select foods, and to explore our environment. Our nervous systems are "wired" for automatic reactions to certain smells, e.g. the reflexive withdrawal from ammonia fumes. Smells also seem to call up memories more readily and intensely than other sensory experiences; the region of the brain into which the olfactory input is channeled is an important memory area where information from all the senses is integrated and stored.

Construction

This exhibit is simply a table on which sit several squeeze bottles that contain the smells. The bottles are held in place by a board with holes drilled in it at one-foot intervals and 1-1/2" from the edge, with about 5" between the bottom of the board and the top of the table. The mouths of the bottles stick up through the holes, while the bottoms sit in shallow wells routed in the table top. We have hinged the front 5-1/2" of this board to pivot up and away from the bottles, so we can remove and refill them. We have two separate tables, 5 smells to a side, for a total of 20 smells. Our bottles are spaced about one foot apart.

On the retaining board beside each bottle top is a concealed label which tells the visitor what the smell is. We use 2 x 4" laminated signs which we cover with 1/16" thick pieces of rubber sheet. The rubber sheet is screwed to the table with a strip of hardwood along its upper edge.

The space in the middle of the table is taken up with the exhibit graphics. These display the molecular structure of many of the scents. We originally did not display these structures, believing them to be too complicated and distracting. We changed our mind when we received many requests from visitors who were curious to see what the molecules looked like. Chemists also appreciate having the diagrams displayed for themselves and their students.

The bottles must be flexible and durable enough to take a whole lot of squeezing. We use Nalgene 500 milliliter LDPE bottles (LDPE is Low Density Polyethylene). These bottles are available from almost any chemical supply house (like Van Waters and Rogers [VWR], for instance). We originally tried to install several kinds of nozzles in the bottle top, but found that a simple 1/8'' hole drilled in the top works best.

Since we're interested in the chemistry of smell, our scents are single component smells—that is, the smell is produced by a single type of molecule; we have listed below the names and structures of these chemicals. We received much help from:

Dr. Ron Buttery
U.S.D.A
Western Regional Research Center
800 Buchanan St.
Albany, CA 94710
telephone: (415) 486-3322

Although Dr. Buttery cannot supply chemicals to everyone, he is a good source of information if you call or write him.

If you aren't concerned about having single component smells, perfume manufacturers are a good source for scents. One in San Francisco that has been helpful to us is:

Robin Clark
The Perfect Scent
1797 Market St.
San Francisco, CA 94103

Other scents, such as vanilla, banana, and anise, can be purchased from your local grocery store or candle shop.

In order to provide further insight into the relationship between molecular structure and smell, we have placed the two enantiomers (mirror image molecules) of carvone side by side: one smells like spearmint, while the other smells like carroway seeds.

Critique and Speculation

Nothing much can go wrong with this exhibit, but it does require a daily check, and the solutions in the bottles must be replaced frequently, as they age or evaporate. Some scents (like mothballs) could cause minor allergic reaction or irritation, so you should be selective—do a little experimenting with new scents on the staff of your institution before placing the scents on the museum floor.

The rubber sheets over the labels tend to get stretched out of shape. We are trying other methods to cover the answers at this time. You might try a lexan cover, or hinged wood or aluminum. The covers must be designed so that they can't be left in the open position, but drop down automatically over the labels.

There are other possibilities for smell exhibits that you may wish to explore. One interesting area is that of sex differences: there are some scents that are perceived differently depending on whether the smeller

is male or female. Another possible exhibit subject is those smells that are used intentionally by product marketers to trigger favorable associations, as in products such as Playdough, Sea & Ski, baby powder, Chapstik, etc.

Related Exploratorium Exhibits

Adaptation

Bird in the Cage; Brine Shrimp Ballet; Fading Dot; Depth Spinner.

Sensors, Chemical

Electric Fish; Blind Spot; Shimmer; Benham's Disc.

Sensors, Special

Drum; Hot Light; Suspense; Another Way of Seeing.

Molecular Structure

Rubber Muscle; Electromagnetic Spectrum; Polaroid Sunglasses; Bubbles; Rotating Light; Polaroid Projector.

Exploratorium Exhibit Graphics

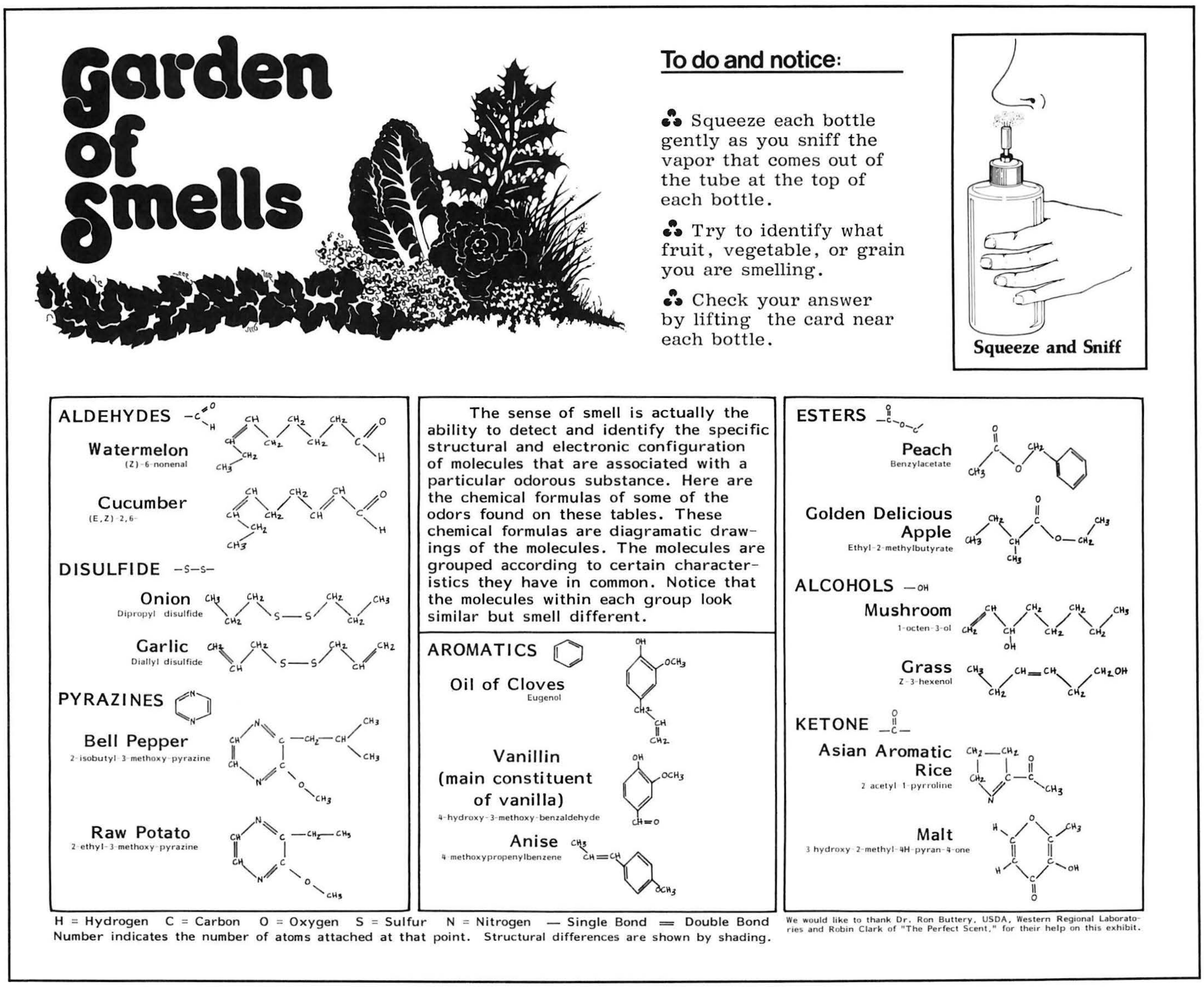

Patterns

Alfred North Whitehead once said that ''Art is imposing patterns on nature.'' Science and mathematics also deal with patterns—those which people impose on nature, and those that seem inherent in natural phenomena. In the *Harmonograph* you can see how several simple, linear forces on a pendulum table add up to create a more complex curvilinear pattern of motion that shifts with each complete swing, forming a lovely moiré-like design. In *Non-Round Rollers*, the movement pattern of a circle is made by shapes that aren't circles at all. Changing shadow patterns on the ground, created by the earth's movement in relation to the sun, can be used as a clock in the *Sun Dial*. And, in *Horse and Cowboy*, you can see that your own patterns of seeing influence the way you solve (or don't solve) this puzzle.

Patterns Exhibits in Cookbooks I, II, and III:

Horse & Cowboy

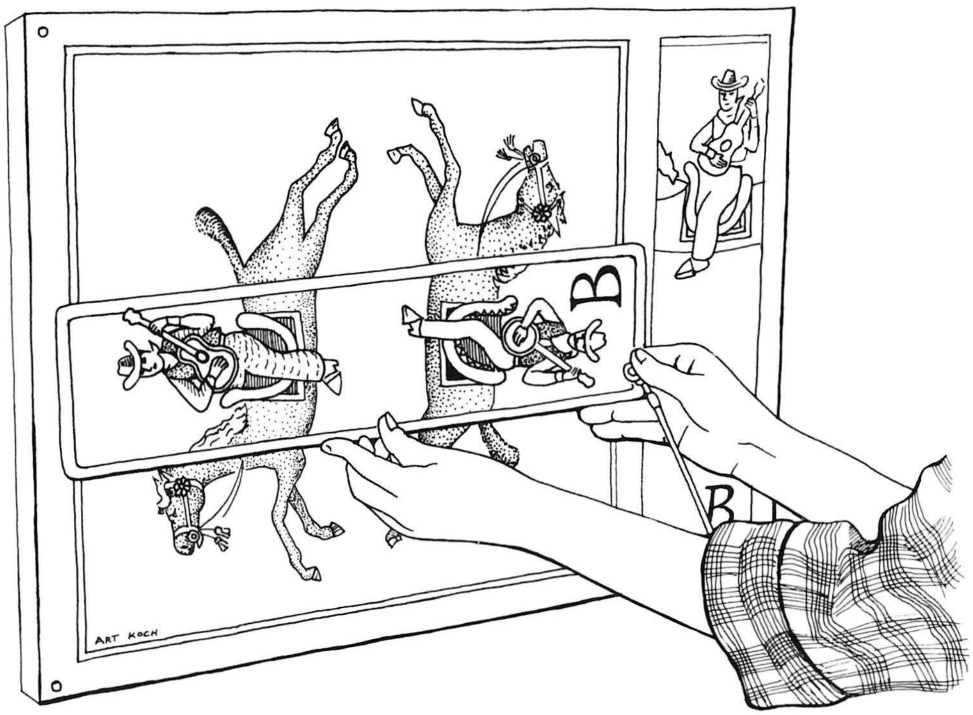

Description

Not everyone gains insight into a problem in the same way or at the same stage of the solution. Insight is often thwarted or delayed by an inappropriate assumption about the task. The visual make-up of this puzzle stops many people from discovering that they can turn the hand-held strip on its side.

Related Exploratorium Exhibits

Cues, Dominant

Cows; Distorted Room; Far Out Corners; Floating Rings; Impossible Triangle; Light Pistons; Paradoxes; Reverse Distance; Reverse Masks; Size and Distance; Trapezoidal Window; Subjective Contours.

Pattern Recognition

Becalmed; Circles or Spirals; Circular Deformations; Lincoln Pictures; Discernibility; Listening for Letters; Old Woman, Young Girl; Paris in the Spring; Vase or Face.

Construction

This is the easiest recipe in the cookbook. Duplicate the diagram with a stat camera, enlarging it to a reasonable size (our square A is 16'' on a side). Note that you will need two of strip B—one that remains attached to square A, and another hand-held one. Attach the combined A and B diagram to a wall with a sheet of 1/8'' plexiglas over it for protection. Laminate the independent strip B in plastic or sandwich it between 1/16'' plexiglas sheets. Hang this strip from the wall next to the large diagram. Make sure that the cord is long enough to allow the visitor to move the strip anywhere over the surface of square A. That's it!

Critique and Speculation

The source of this graphic has been lost in time. We would like to give the originator credit for it. If you know of its origin, please let us know.

Attaching exhibits to walls is not a very good idea. When the museum gets rearranged, it is very time consuming to have to re-mount a wall of pictures. You might consider making a free-standing display.

Horse and Cowboy

Solving this puzzle requires a new way of looking at things.

To do and notice

- Look at the two panels below. Can you imagine a way to place Panel B to make both the cowboys sit properly on the horses in Panel A?
- If you can't imagine a solution, experiment with the movable Panel B that is hanging from the wall.

What's going on

Stumped? A simple problem can sometimes seem impossible until you find a new and unexpected way of looking at it. Ordinary horses can't swap heads and tails—but picture horses can. Try turning Panel B horizontally, so that each cowboy straddles a horse made up of the head of one horse and the tail of the other.

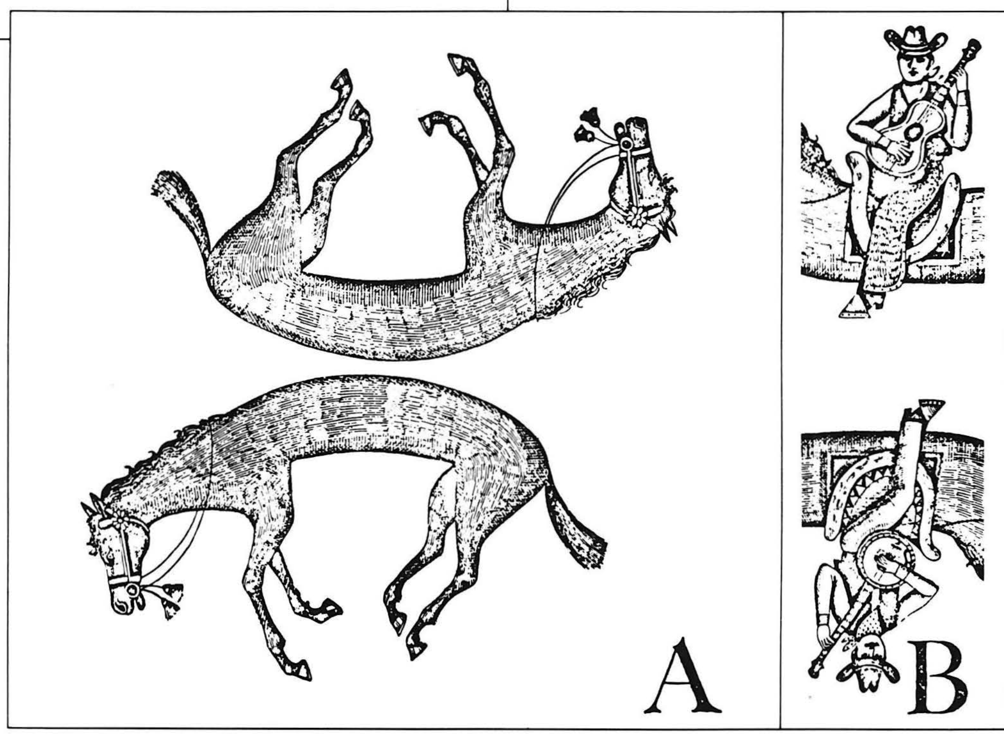

Non-Round Rollers

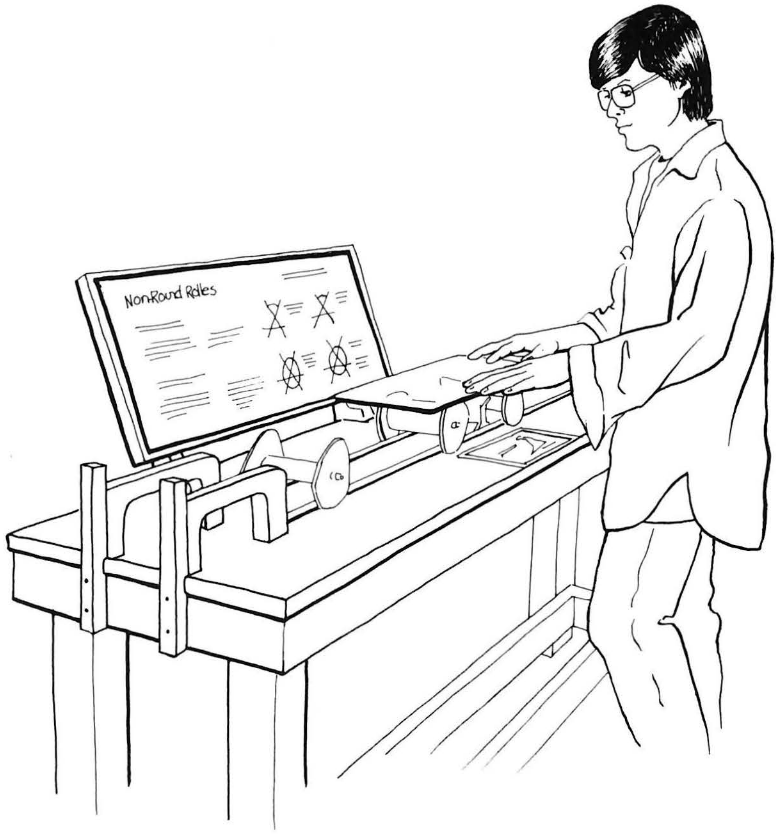

Description

A plastic panel is rolled on top of what appear to be very lopsided rollers. Surprisingly, the panel rides along smoothly in a single plane, despite the seemingly random shape of the wheels. The circle is not the only curve that is of constant diameter. The four rollers in this exhibit are examples of an infinite variety that one can construct using simple geometric procedures.

Construction

This exhibit is built on a long skinny table 17'' deep and 74'' long (no, I don't know why such strange dimensions were chosen). A ''landing platform'' is placed at each end of the table, so that the moving objects don't roll right off the table and onto the floor. The platforms are made of hardwood and have two nylon strips inset into the top where the plastic will rub. Because it's a long run from one end of the table to the other, a wooden stand with two rubber-tired wheels is fixed in the middle. Usually two of the four non-round rollers sit on one side of the center and the remaining two sit on the other side. Note that it is essential for the landing areas and the center rollerstand to have the same height as the diameter of the four rollers. To keep the rollers running straight and true along the table, they are guided by strips of 1/4'' masonite fixed to the table. These strips are just slightly less than 4 1/2'' apart (the spacing between the wheels) and are slightly beveled.

The rollers are simple in construction. The generation of the wheel shapes is explained in the exhibit graphics later in the recipe. The aluminum templates for the wheel shapes are laid out and bandsawed close to finished shape, then belt sanded to size. A piece of 1/4'' PVC is bolted to the template; the wheel is then duplicated on a router table with a laminate trimming bit. Two wheels of the same shape are cut for each roller, and must be carefully aligned so they are perpendicular to the axle

and in phase with each other. They are glued with PVC solvent cement to a 4-1/2'' long PVC pipe/axle. To make a strong glue bond, we cut a circular groove in the wheel into which the PVC pipe fits. This groove can be cut on a lathe or on a drill press with a circle cutter. A piece of threaded rod (inserted through the holes drilled for the template) runs inside the pipe and is captured with nuts on either end. This rod is left in place even after the glue has dried and adds strength to the roller assembly. Notice that there is no particular location for the axles and threaded rods, since there is no real "center of rotation"; but wherever you locate them on one roller, you must fix them in the exactly corresponding position on the other. The plastic panel which rides on top of the rollers is made of Lexan plastic (virtually indestructible) and measures about 20'' long and 7-1/2'' wide by 3/8'' thick. We have painted two hands on top of the panel, since the exhibit only works well when the user applies both hands.

Critique and Speculation

The principle of this exhibit has some useful applications. A drill that can make triangular, square, and other shaped holes uses the principle of constant diameter shapes. These drills are only available from:

Watts Bros. Tool Works
760 Airbrake Ave.
Wilmerding, PA 15148
telephone: (412) 823-7877

A good article on curves of constant width appears in *Scientific American*, Feb. 1963, in the Mathematical Games section. It describes the above drills, and was the inspiration for this exhibit.

See the recipe for *Square Wheels* for a related exhibit.

Exploratorium Exhibit Graphics

Non-Round Rollers

To do and notice

Place the plexiglas board on top of the rollers. Now, roll the board slowly over the tops of the rollers.

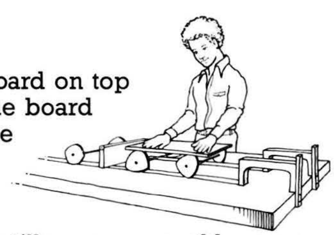

Notice that the board still moves smoothly over the wheels without going up and down, even though the wheels are not round.

What's going on

The board is always an equal distance from the table because the wheel disks, while not round, are of "constant width."

A circle is also a figure of constant width and has the great advantage of having only one center. On your right you can see how figures of constant width are drawn.

Related Exploratorium Exhibits

Composition of Circular Motion

Differential; Model Differential; Pacific Gas and Leather; Ring Toss; Rotating Light; Two Wheels and a Ball.

Shapes

Faces or Vases; Peripheral Vision; Seen Clearly in Hazy Conditions; Whirling Watcher; Visible Magnetic Domains; Discernibility/Going to Pieces; Lumen Illusion; Triple-Aye Light Stick; Inferno; Recollections

How to draw a figure of constant width.

1

Draw three intersecting lines. (Any odd number of lines will work.) Then draw an arc from line A to line B with its center at the intersection of A and B.

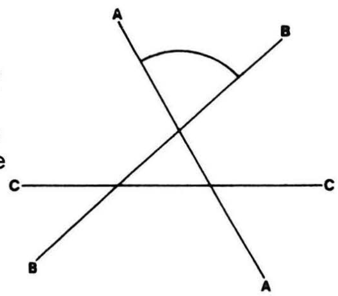

2

Draw another arc from B to C with the center at B and C's intersection.

Continue on around in this way.

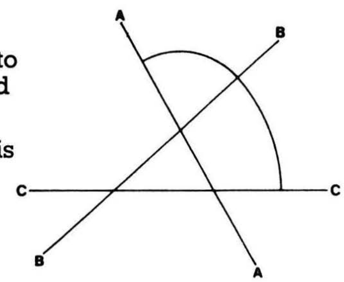

3

Notice in this figure that a second arc has been drawn whose center is at the intersection of A and B, but is of a different radius. The sum of the two radii is equal to the "width."

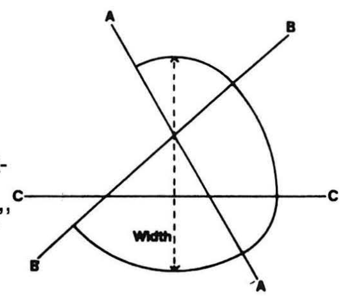

4

If you have been careful, the last arc, centered at the intersection of A and C, will meet up with the first arc drawn.

If you start with too small an arc you won't be able to complete the figure because an arc will run into a triangle. If you start with a very large arc, the figure will look more and more like a perfect circle.

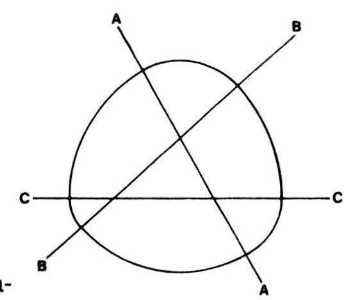

Mathematics

Exhibits in this section explore relationships—relationships between rates of growth, decay, and size; relationships between rates of change. You can see the predictable swing of a pendulum become unpredictable in the *Chaotic Pendulum* exhibit when tiny differences in three connected pendulums add up to make a very chaotic situation. In the *Bouncing Ball* exhibit you can see the relationship of the steady decay of the bounce of a ball over time: each bounce decreases in a constant fraction of the height of a bounce. The relationship of surfaces can be experienced in a surprising way at the *Square Wheels* exhibit. Here, a bumpy road can feel smooth as glass when a square wheel travels down a road on a series of catenary-shaped bumps.

Mathematics Exhibits in Cookbooks I, II, and III:

Bouncing Ball

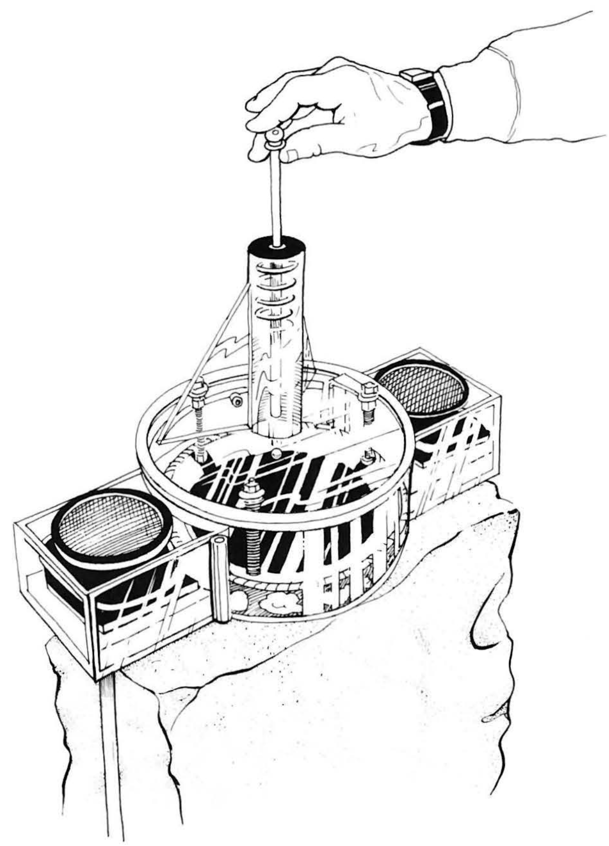

Description

The visitor pushes down a plunger and picks up a steel ball with a magnet. As the plunger is allowed to rise, it returns to its original height, releasing the ball near the top. The ball drops onto a steel plate, where it bounces. Since the bounce sounds are amplified and broadcast on a set of speakers, the visitor can hear the frequency of bounce increase to a maximum of several hundred hertz (if the ball and plate are clean) as the top height of each bounce decreases. Because the ball rises each time to the same fraction (about 95%) of the previous bounce, the frequency of bounce goes up (and the height of bounce decreases) exponentially.

Construction

In order to keep the ball bouncing in the center of the plate (an 8" diameter, 1" thick disk of machinable steel, alloy ANSI D2), ours was machined on a lathe to a concave curve with a radius of about 60". We suggest that you experiment with larger radii and dish the plate as little as possible, as this will minimize sideways excursions of the ball. Our plate was then sent out to a heat treating company to be hardened. Tell the heat treating company that you will be bouncing steel ball-bearings on the plate and they will harden it properly for your situation (apparently there are many ways to harden steel). When our plate came back from heat treating, it had a dull oxide coating on it. We put it back in the lathe and polished the oxide off with steel wool.

Since you want the collision between the ball and the plate to be as elastic as possible, the plate must be rigidly mounted on a heavy base. Our base is a 22 x 18 x 12" piece of granite (see Critique and Speculation below) procured from a local monument company (tombstone maker). We chose the granite slab because it was relatively cheap and, we felt, more elegant than poured cement. The granite block sits on a forkliftable wooden pallet.

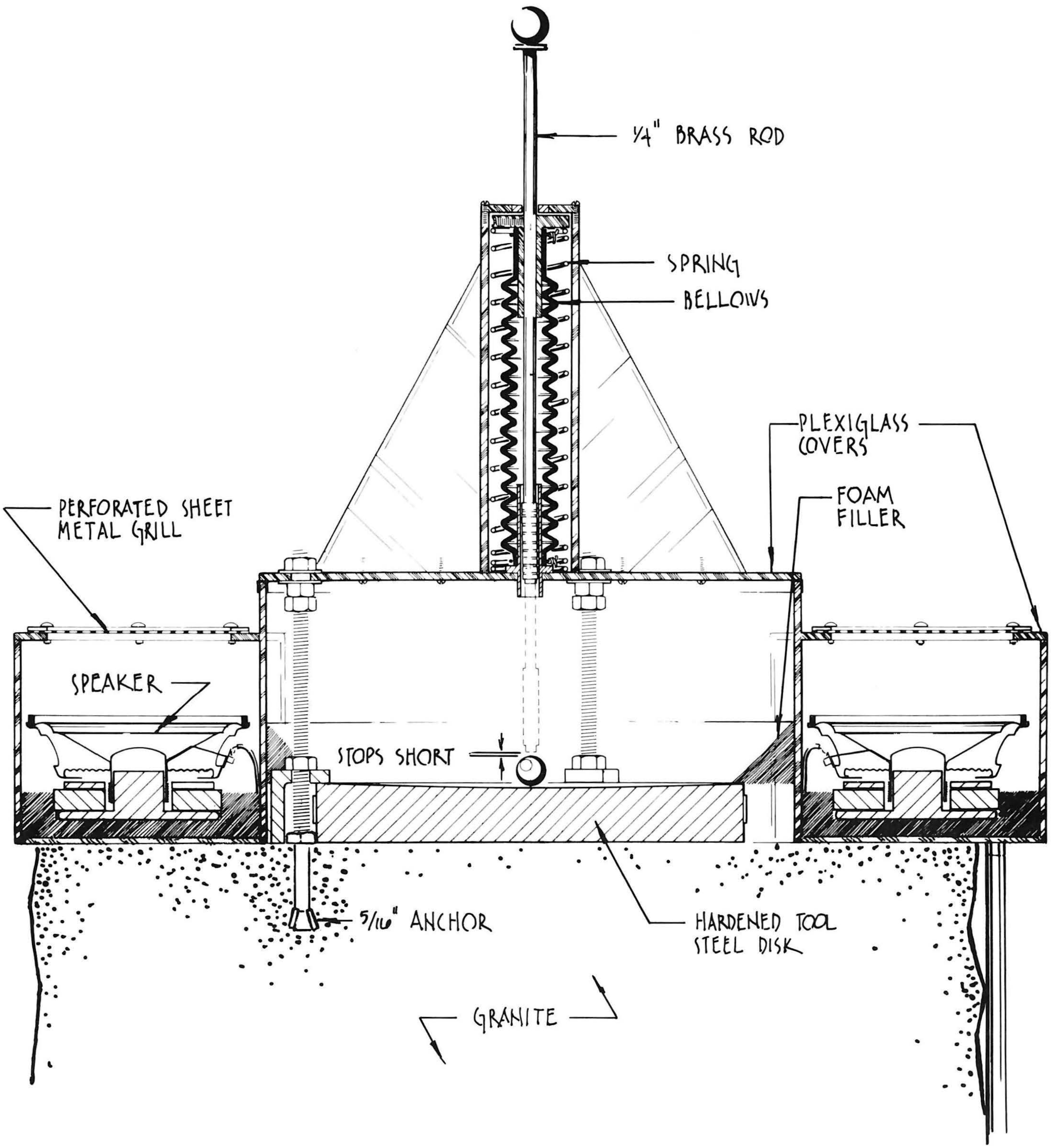

1/4" BRASS ROD
SPRING
BELLOWS
PLEXIGLASS COVERS
FOAM FILLER
PERFORATED SHEET METAL GRILL
SPEAKER
STOPS SHORT
5/16" ANCHOR
HARDENED TOOL STEEL DISK
GRANITE

The steel plate is held to the top of the granite block with three cleats bolted into the granite with 5/16" threaded rod. If your plate does not sit flat on top of the block, you can grout a flat place for it. The threaded rod is held in the granite with standard anchors (made by Star or Rawl). Talk to the folks you buy the granite from to find out how to drill the holes for the anchors; if you make a cement block, simply use a masonry drill. These threaded rods also clamp the plexiglas cover and speakers to the granite block. The same type of anchor bolts can be used to fix the block to its wooden pallet.

The plate is enclosed in a plexiglas cylinder (11" OD x 5" high) with a rubber gasket on the top rim; the plexi disk that is the top of the cylinder is pulled tight against this gasket with the above-mentioned threaded rods (see cut-away diagram). The speakers are housed in plexi boxes that have perforated sheet metal grills for tops; these boxes are solvent-cemented to the sides of the cylinder. A locked door in the rear of the cylinder allows access to the plate for cleaning and maintenance.

The plunger assembly is simply a 1/4" brass rod with a magnet attached to the end. This rod is spring loaded in a plexiglas tube which is cemented to the top of the cylinder cover. Our plunger has about 4" of travel. Note that the plunger tube has two fin-shaped plexiglas supports that face the back of the exhibit and bolster the assembly against the considerable rough treatment it receives. The top 4" of the brass rod is keyed (with a small 1/16" square strip of brass, silver-soldered to the side of the rod) to keep it from rotating. This key fits into a matching notch in a removable top plate. A brass ball knob is silver-soldered to a brass washer which is then silver-soldered to the top of the brass rod. A brass disk, silver-soldered to the rod, bears on the hand-wound spring inside the tube. The rod is additionally enclosed in a rubber bellows, which keeps dirt from being pumped into the exhibit each time the plunger is pushed down. The bellows is manufactured by:

A & A Manufacturing
2300 S. Calhoun Rd.
New Berlin, WI 53151
telephone: (414) 786-1500

Our bellows is a "Gortite" variety. A & A Manufacturing does not keep many stock items but will make small quantities at reasonable prices.

The magnet is attached to the bottom of the brass rod with heat-shrink tubing (3M Scotchtite 105 degree FR-1). The brass rod and magnet are grooved to keep the heat-shrink tube in place (see diagram). The magnet is brittle and can be easily shattered, so we have capped it (on the bottom) with a small hard-steel cup held in place with the heat-shrink tube. Note that when the plunger is released, the magnet retreats through a hole, knocking the steel ball loose; this hole (in the lid of the cylinder) has a Rulon bearing installed in it (see diagram).

The sound of the bouncing ball is picked up by a standard contact microphone available at musical instrument stores. The microphone is attached to the side of the steel plate with a large hose clamp (the kind with a screwdriver-adjustable worm gear). The amplifier electronics (also available at music stores or your local Radio Shack) is housed in a small compartment below the granite block and locked behind an aluminum door.

Critique and Speculation

Be careful when you buy your granite block. Ours turned out to be too narrow, and our exhibit overhangs the edges.

Do not mount your speakers face up like we did—they tend to collect dirt and dust. If you have exhibits with black sand in them, the black sand inevitably finds its way onto the speaker cones.

If you don't have access to a lathe to cut the steel plate, you can try grinding the proper radius using standard telescope making procedures. Consult your local amateur astronomy groups for help, or look up books on telescope making and mirror grinding in your local library. (We're not sure that this will work, so please report back to us if you try it this way.)

Related Exploratorium Exhibits

Accelerated Motion

Avalanche; Balancing Stick; Chaotic Pendulum; Daisy Wheel Dyno; Downhill Race; Falling Feather; Gravity Well; Lunar Lander; Phase Pendulum; Reaction Time; Vortex; Tornado.

Damping

Electric Pendulum; Fading Tone; High and Low Q; Fading Motion; Longitudinal Wave; Slow Charge/Discharge; Wave Machine; Drawing Board; Sound Column.

Exponentials and Logarithms

Capstan; Catenary Arch; Growth Curves; Survival of the Fittest; Air Pump; Logarithmic Stacking; Avalanche; Fading Motion; Drawing Board; Million to One; Fading Tone; Phototube; Balancing Stick; Energy vs. Power.

Limits

Survival of the Fittest; Holes in a Wall; Christmas Tree Balls; Air Pump.

Exploratorium Exhibit Graphics

Bouncing Ball

To do and notice:

Lower the plunger to capture the steel ball.

Release the steel ball by raising the plunger.

Notice that the ball bounces slowly at first and then more and more rapidly until it bounces so fast that it sounds like a rising musical note. The frequency of the bounces rises exponentially.

What is going on:

Each time the ball bounces it loses some energy, and therefore the ball does not rise as high as it did on the previous bounce. The amount that the height of bounce decreases is a constant fraction of the height, about 7% per bounce. Since the rate of change is proportional to the size, the height of the bounce (and the time between bounces) decreases exponentially.

The steel plate has a contact microphone attached to it to amplify the sound.

Recipe No. 200

Chaotic Pendulum

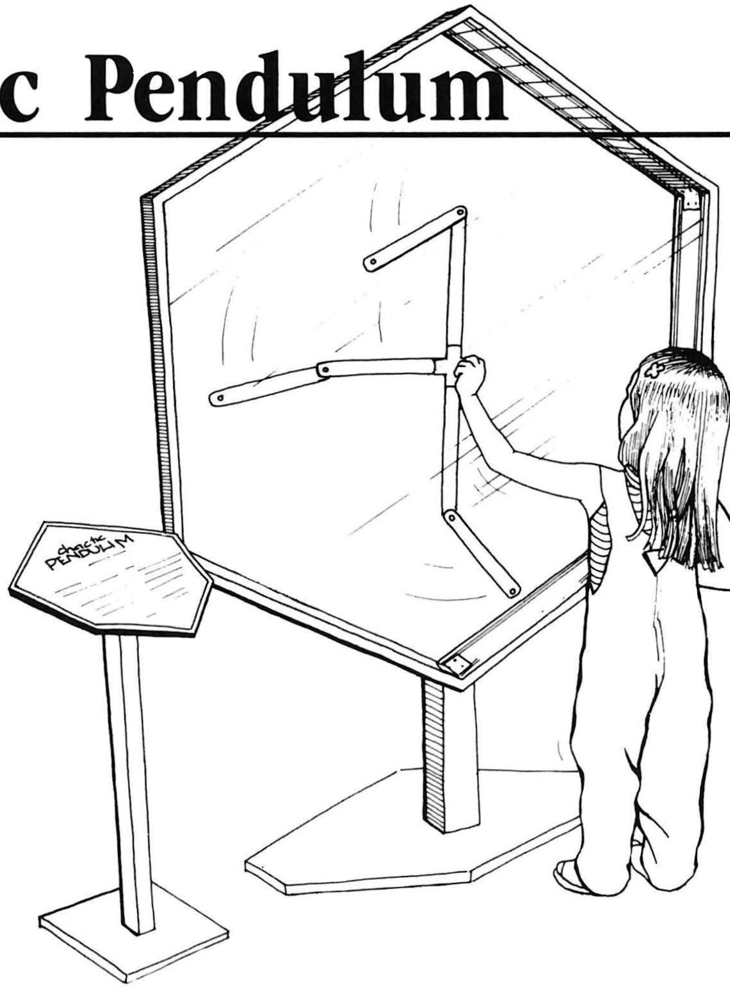

Description

Chaotic Pendulum is an art piece by Ned Kahn, who has worked for many years with the phenomena of motion. This set of connected pendulums demonstrates that a simple motion—a twist of a knob—can have complicated and unpredictable results. *Chaotic motion* occurs whenever a small difference in the initial conditions makes a large difference in the outcome. Such systems have many branching points; so many branches can be taken that predictability becomes impossible. Like other pieces built for the Exploratorium by artists, **Chaotic Pendulum** also functions as a science exhibit.

Because **Chaotic Pendulum** is a popular exhibit, we included details of its construction in earlier editions of Cookbook III. However, since the first publication of Cookbook III, we have instituted a new policy: Out of respect for the artists who work in the Exploratorium on commission, we no longer give out information on the construction of art pieces. If you are interested in the construction details of **Chaotic Pendulum**, you can contact the Exploratorium, and we will put you in touch with the artist.

Square Wheels

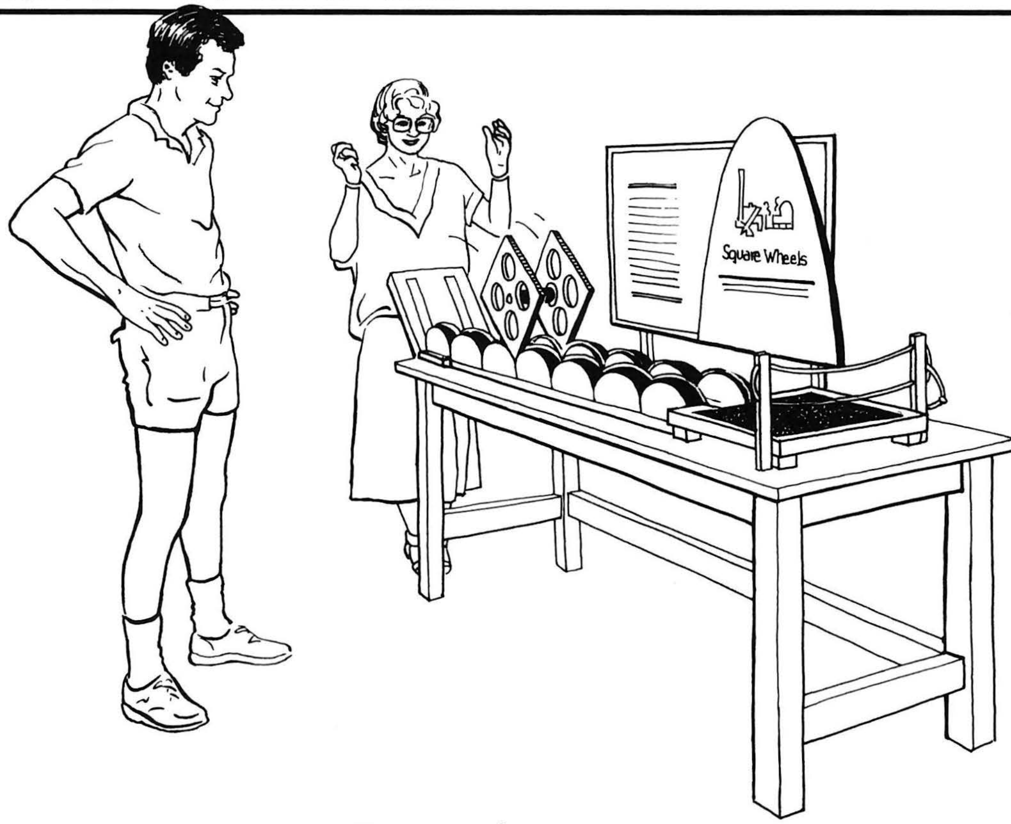

Description

Have you ever seen the cartoon of the caveman scratching his head and looking at a square wheel? Well, it would have worked if the caveman had had a specially shaped street on which to use it. This exhibit demonstrates that a square wheel will roll smoothly on a surface with properly spaced bumps of the right size and shape. The visitor starts a square wheel rolling from a slanted launching ramp (which aligns the wheel properly) over a scalloped road. The wheel is observed to roll smoothly with the axle at a constant height. The wheel will also balance wherever it is left, even if it is on the side of a bump (assuming it is aligned properly to start with).

Construction

The trick to this exhibit is getting the correct "bump" for your wheel. The bumps are catenary curves, and the exact catenary depends on the size of the square wheel that you choose. To plot out the catenary, use the following equation:

$$y = a \cosh(x/a) = a/2 \left(e^{(x/a)} + e^{(-x/a)} \right)$$

where "a" is half the length of the square wheel's side (or the distance from the center of any polygon to the the middle of one of its sides—see Critique and Speculation). To avoid any distortion of the curve, plot this out on a piece of 1/8" to 1/4" thick aluminum plate. This plate will become a router template for cutting the wooden bumps, after the "theoretical curve" described in the formula is adjusted to the "actual curve" necessary for the final rubber-covered bump (see below).

The horizontal dimension for each bump depends on the size of the square wheel, with the length along the catenary curve being equal to the length of the square wheel's side. To find the horizontal dimension of the bump, we differentiate the above equation and solve for where the slope equals 1. This is where the square wheel is balanced on its corner at the junction of the two bumps. The derivative of the cosh function is simply the sinh function.

Below is an example for our wheels, which are 10" across ($a = 5$):

Solve $Y' = \sinh(x/a)$ for x, with $Y' = 1$ (the slope) and $a = 5$

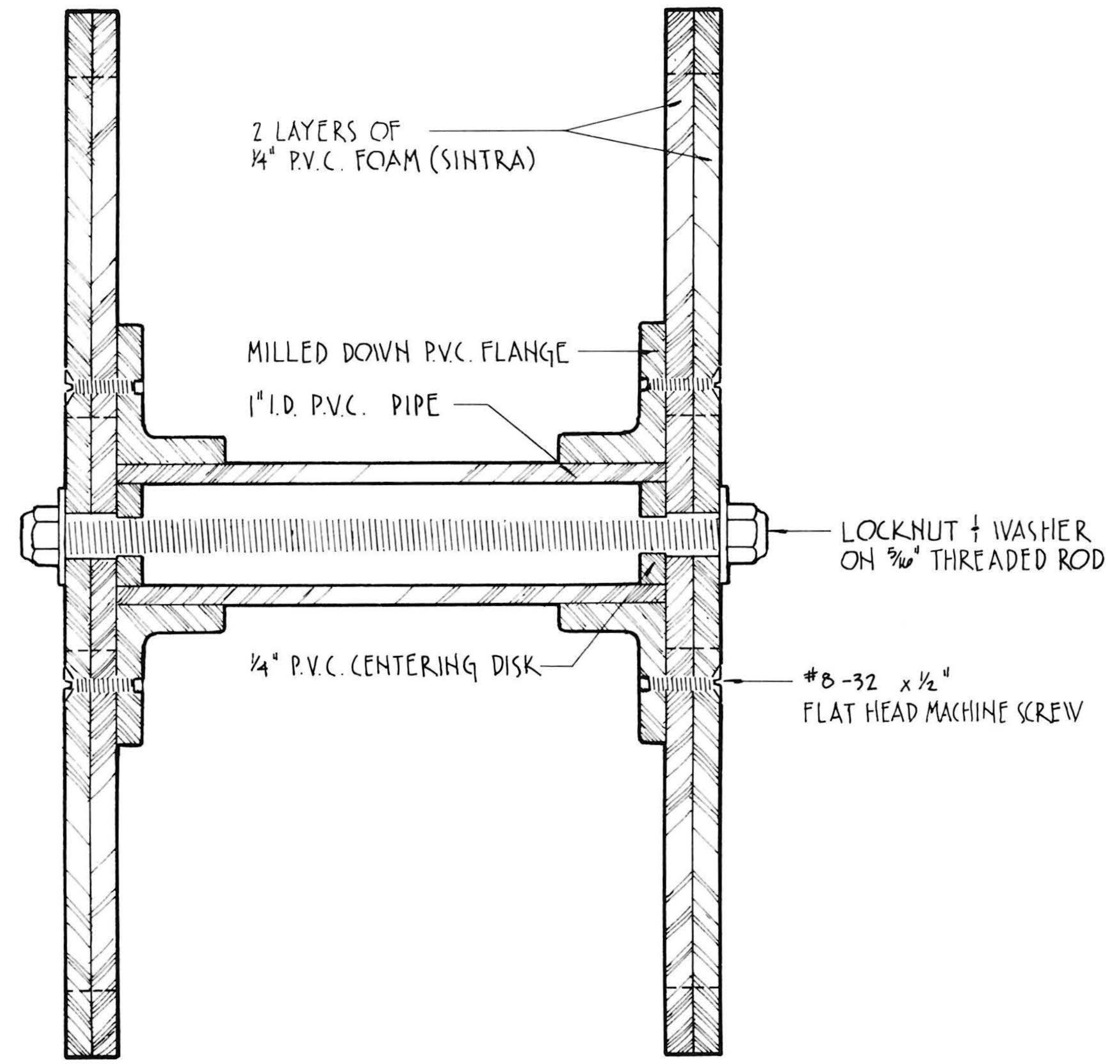
2 LAYERS OF
1/4" P.V.C. FOAM (SINTRA)
MILLED DOWN P.V.C. FLANGE
1" I.D. P.V.C. PIPE
LOCKNUT & WASHER
ON 5/16" THREADED ROD
1/4" P.V.C. CENTERING DISK
#8-32 x 1/2"
FLAT HEAD MACHINE SCREW

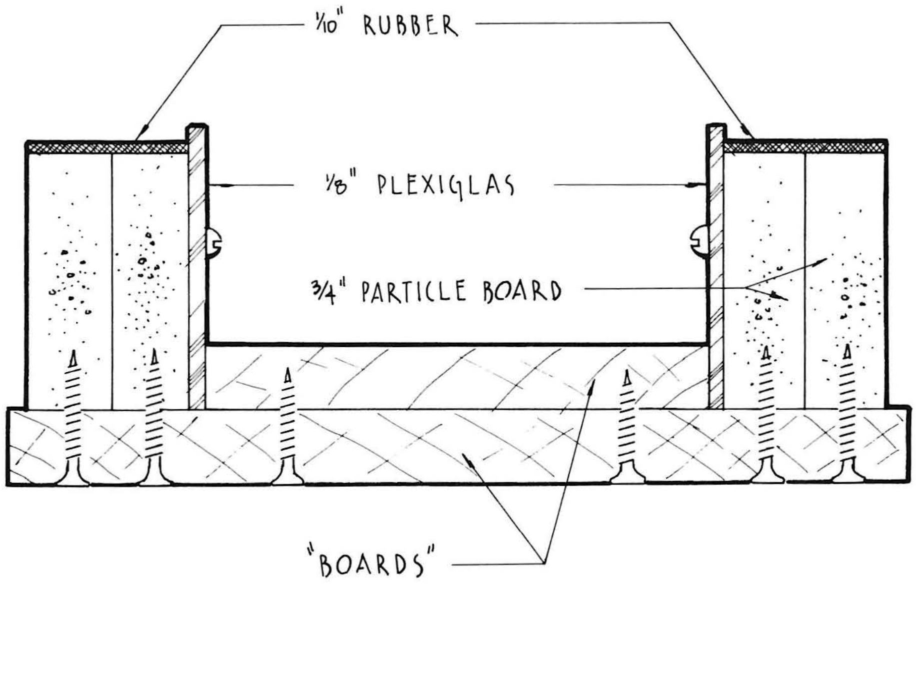
1/10" RUBBER
1/8" PLEXIGLAS
3/4" PARTICLE BOARD
"BOARDS"

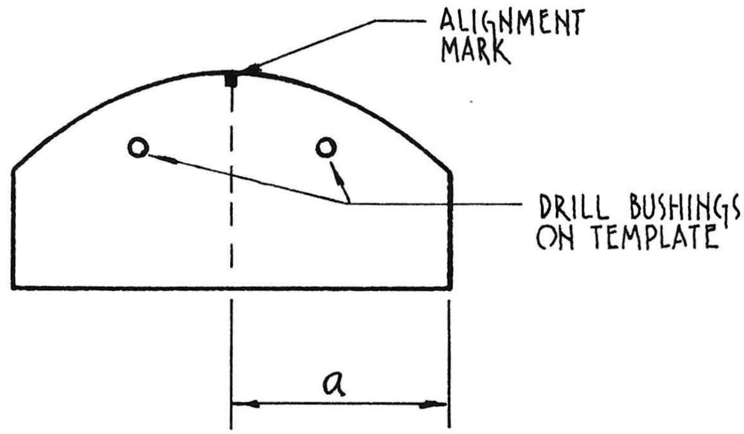

You first solve for sinh(x/a) = 1 by using a calculator or computer that does sinh (and if you're lucky, arc-sinh)—or you could find the answer from a table in a book (and be snubbed by all of us computer hackers). This gives you x/a = 0.8814. Now solve for x by multiplying by a. The result, x = 4.407 inches, is the half-width of the bump.

Once you have this "theoretical" curve, you can begin to figure out the actual curve from which the real bumps will be cut. The difference between the theoretical and actual curves occurs because the wooden curves are made non-slip with a layer of rubber sheeting. The thickness of the rubber sheet must be taken into account before making the actual wooden bumps. To do this, take your theoretical curve and draw a parallel curve below it, with the distance between the two curves matching the thickness of the rubber sheet. Since we wrap the rubber sheet around each wooden bump, the same thickness must be subtracted from the bump's sides.

Be sure to sand the curve of the template smooth, as any irregularities will be duplicated when you route the wooden bumps. We drilled two holes in the aluminum and inserted steel drill bushings (see diagram), which make the template a drill guide as well as a router guide, and insure that all holes are drilled uniformly. Once the registration holes have been drilled in the wood, alignment bolts are inserted and the curve is cut. Use a ball bearing router bit on a router table. Note that only one 3/4" thick piece of particle board can be routed at a time (at least with our router). The registration holes can be used when putting the bumps together.

Our wooden bumps are 1-1/2" thick, made of two layers of 3/4" particle board screwed together. We use a total of 14 bumps with 7 on each side for a road about 5 feet in length. (This of course means that we had to route 28 3/4" pieces.) Apply the rubber strips to the wooden bumps with Scotch 90 spray adhesive. The bumps are screwed (from below) onto a "roadbed" board (see diagram). Another board between the two rows of bumps helps to stabilize the plexiglas guides and to keep everything vertical. The width of this board depends on the spacing between your wheels. The 1/8" plexiglas guides are sandwiched between the bumps and center board; they help keep the wheel on track.

To help the visitor start the wheel properly, we attached a 45 degree ramp flush to the left side of the bumps. Here the wheel can be laid flat and lined up with the first bump. A horizontal carpeted landing zone is also provided at the right end of the road.

The wheel assembly is a plastic construction. Four oversize square foamed-PVC plastic wheels are cut from 1/4" thick stock, glued together into 1/2" thick pairs, and then cut to their final 10" size. Large circles were cut out of the wheels to lighten them. The plastic used in the wheels, selected for its lightness, is called "Sintra" and is made in Europe by Alusuisse Metals, Inc.; we got ours from:

Pacific Coast Plastics, Inc.
1235 Howard St.
San Francisco, CA 94103
telephone: (800) 227-4011 (outside CA) (415) 864-2252 (in CA)

The two wheels are held together with a 1-1/4" diameter PVC pipe glued into PVC flanges (machined), which are in turn bolted to the square wheels. A long piece of threaded rod fastened with captive nuts passes through the center of the wheel (see diagram). The threaded rod keeps the wheels together and the four bolts that screw into the PVC flange keep the wheels from rotating relative to one another; center-drilled disks in the ends of the pipe help align the threaded rod. Be sure to carefully position the wheels on the axle so that the edges of both wheels are parallel. If the two wheels are rotated relative to one another, they won't roll smoothly. The corners of the wheels are rounded slightly (about 1/16" to 1/8" radius).

As an alignment aid, we put marks on the sides of the bumps at the tops of the curves and also on the midpoints of the wheelsides. The visitor can align the wheel to the bump and notice that if rolled a small distance, the wheel will remain in a given position on that bump.

Critique and Speculation

The development of Square Wheels illustrates a common conflict that can occur among exhibit designers. One side of the design team crusades for elegance and precision, while the other faction fights for a sturdy exhibit that will never wear out. The plastic-on-rubber combination that we arrived at to put our wheels on the road was actually a compromise between these two ideals. For instance, sandpaper-like stair tread material on the bump surfaces, combined with a thin rubber tread on the wheel, makes for a better grip, without any creep, than the present solution; but it also wears out quite fast and is too much of a maintenance problem. Solid plastics and metal are more durable than the foam plastic we use for the wheels, but don't have the advantage of lightness that you get with the Sintra.

The wheel surfaces become glazed periodically, requiring a light sanding to roughen them up. This of course makes the wheels slightly smaller each time, and eventually they have to be replaced. Since they also get bashed around some, you should be prepared to replace them at regular intervals and be set up to make new ones easily.

This idea of non-round wheels can be extended to any polygon except the triangle, whose corners are too sharp and get caught in the gullies. Obviously, the more sides the polygon has, the more it will resemble a circle and the smaller the road bumps will be—and the exhibit's dramatic impact will decrease proportionately.

Related Exploratorium Exhibits

Shape

Faces or Flower Vases; Peripheral Vision; Seen Clearly in Hazy Conditions; Whirling Watcher; Visible Magnetic Domains; Discernibility/Going to Pieces; Lumen Illusion; Triple-Aye Light Stick; Inferno; Recollections.

Composition of Circular Motion

Differential; Model Differential; Pacific Gas and Leather; Ring Toss; Rotating Light; Two Wheels and a Ball.

Moment of Inertia

Scaling; Downhill Race; Pendulum Table; Adjustable Plaything; Chaotic Pendulum; Drawing Board; Balancing Stick.

Square Wheels

This square wheel rolls smoothly over bumps shaped like catenary curves.

To do and notice

Place the square wheel on the far left end of the bumpy road. Push the wheel to the right and then let it go. Notice that the wheel rolls along smoothly and that the axle stays at a constant height.

Balance the wheel on top of one of the bumps and then nudge it very gently to one side or the other. Notice that the wheel rests in this new position rather than toppling.

What's going on

The shape of each bump in the road is a catenary curve, the same type of curve found in our *Catenary Arch* exhibit. As the square wheel rolls over these bumps, its center of gravity is always over the point where the square touches the bump. This means that the wheel is always balanced, so that its center of gravity remains at the same height. Since the wheel is always balanced, it keeps rolling with only a small push, just like a cylinder rolling along a flat surface. The wheel also tends to stay put when it is stopped. As long as the wheel is balanced (that is, as long as its center of gravity is supported) there is no reason for the wheel to move, even when it is perched on the side of a bump.

You can make the wheel seem to roll up a bump by shifting it to an unbalanced position. Place the wheel so that a corner is lodged in the crack between two bumps, and then slide it uphill about a quarter inch and let it go. The wheel will roll up over the bump you left it on, stopping only when its corner runs into the next bump.

So what

A great number of differently shaped wheels can be made to roll smoothly over an appropriately shaped road. All regular polygons will roll smoothly over a series of catenary bumps if the bumps have the right dimensions. In this case, another size square wouldn't work because the length of a path over the bump must be equal to the length of the square's sides. Triangular wheels won't work at all because the corners get caught in the valleys between the bumps.

Appendix

Exploratorium Video Documentation Project

The Video Documentation Project was conceived to assure that the subtleties and intricacies of the exhibits at the Exploratorium not be lost when their designers are not available to maintain them. Each documentation tape is also helpful to our exhibit-based teacher training and Explainer programs, as well as a supplement to our detailed Cookbooks of exhibit design.

Each exhibit documentation tape contains:

- an explanation of how the exhibit works;
- a description of the phenomena the exhibit demonstrates; and
- a demonstration of how the exhibit is properly maintained for optimal performance.

Within these guidelines there is a wide range of personal style and focus. Some documentation segments are concise and relate specifically to the material components involved in the exhibitry. Others elaborate on ways to use the exhibit and include anecdotes related to the use, construction and/or history of the exhibit. All of these segments demonstrate something much larger and more general than the exhibits themselves, and convey a certain quality about the value of experimentation and curiosity.

Exhibit	Cookbook No.-Recipe No.	Time	Exhibit	Cookbook No.-Recipe No.	Time
Wave Machine	1-62	14.55	Heat Pump	2-129	5.0
Critical Angle	1-2	8.45	Vocal Vowels	3-194	14.20
Convection Currents	3-180	5.35	No Sound Through Empty Space	1-65	6.0
Pinhole Magnifier	1-14	3.30	Cheshire Cat	3-162	5.0
Non-Round Rollers	3-198	7.10	Fading Motion	2-103	18.35
Catenary Arch	2-102	20.15	Rotating Light (Demo.)	2-98	17.0
Polarized Radio Waves	1-26	13.0	Rotating Light (Maint.)	2-98	10.30
Zero to Sixty	3-157	12.0	Soap Film Painting	3-172	10.30
Light Island	3-178	17.20	Long Path Diffraction	1-8	9.20
Short Circuit	3-151	11.20	Resonant Rings	2-86	10.15
Watchful Grasshopper	2-124	21.45	Energy Versus Power	3-142	6.50
Everyone Is You and Me	3-171	16.20	Pluses and Minuses	1-78	11.05
Black Sand/Sand Sorter	2-86	12.15	Stored Light (Demo. & Maint.)	2-132	10.42
Harmonic Series Wheel	1-66	20.35	Falling Feather	3-137	21.45
Delayed Speech/Headphones	3-191	9.0	Inverse Square Law	3-175	9.40
Glass Bicycle Pump	2-129	8.20	Glow Discharge	3-145	6.30
Watts the Difference	3-156	11.45	Pupil	1-32	5.0
Curie Point	3-181	7.25	Dimmers (General Info.)	—	1.10
Lens Table	1-11	20.30	Macula	1-35	9.05
Water Freezer	3-184	21.40	Magic Wand	2-110	9.0
Pendulum Table	3-188	31.15	Peripheral Vision	1-42	9.10
Resonant Pendulum	2-85	10.05	Motion Detection	2-94	4.30
Spectra	2-131	7.0	Sophisticated Shadows	2-112	18.15
Molecular Buffeting (Model)	2-127	7.50	Gray Step 1 (Horse's Tail)	1-43	6.35
Chaotic Pendulum	3-200	6.35	Gray Step 2 (Rotating)	1-44	8.30
Molecular Buffeting (Real)	2-128	8.05	Gray Step 4 (Sliding)	3-158	4.05
Blue Sky	2-95	12.15	Bells	1-64	14.35
Visible Effects of the Invisible	3-190	16.15	Corpuscles of the Eye	1-34	10.0
Daisy Dyno	3-140	7.0	Depth Spinner (Squirming Palm)	1-41	3.55

If you are interested in purchasing video tapes, please contact the Exploratorium for availability and pricing.

Exploratorium Pathways

Exploratorium Pathways are exhibit-based teaching materials that we use in conjuction with classroom field-trips to the museum. To date, there are fifteen Pathways on different exhibit areas. Each Pathway has two parts: an exhibit guide that focuses on eight to ten exhibits in a particular subject area, and a teacher's manual of related classroom activities that can be done before and/or after the museum visit. We are including a reproduction of the "Seeing Color" Pathway in this Cookbook to provide one example of how exhibits can be used as effective teaching props.

Although this Cookbook focuses on constructing individual exhibits, the focus of the Exploratorium's exhibit development is to create groupings of exhibits on particular concepts. While individual exhibits may be interesting and highly attractive, they can provide no more than a superficial introduction to a concept or idea. With groups of related exhibits, our visitors have the opportunity to experience an idea from a number of different viewpoints, thus providing a framework for a deeper understanding of the concepts.

Providing an array of exhibits on a single concept enables the museum to be a very flexible teaching environment. The exhibits can be used by families in a "Sunday sighteeing" sort of way, or by college professors and elementary school teachers as teaching props for their instruction. This type of varied use would not be possible through the selective presentation of single exhibit examples in any one area.

Pathways available include:

Light
Reflection
Bending Light
The Colors of Light
Seeing Color

Sound
Making Sounds
Changing Sounds
Speaking and Hearing
Language

Vision
The Eye
Points of View
Stereoscopic Vision
Being Invisible (Camouflage)

Electricity
Magnets
Charge and Current
Motors and Meters

exploratorium pathways

THE COLORS OF LIGHT

Classroom Activities

A SUN OF MANY COLORS

At the end of the seventeenth century, when Isaac Newton began experimenting with light, color was still a great mystery. Where did it come from? How did it happen? Did an object change light to give itself color, or was the object somehow releasing color on its own?

For some time, people had noticed the mysterious appearance of colors whenever sunlight shone through water or glass. They called these colors the "spectrum," a word which means spectre, or ghost, and reflected the mystery surrounding their appearance.

In 1704, Isaac Newton did two experiments that finally revealed the nature of light and color. In his first experiment, Newton held a wedge of glass—a prism—in a beam of sunlight to make the spectrum appear. Newton thought that if he held a second prism in each of the rainbow colors, he could break them down into still other colors. But no matter how he held the glass, Newton just couldn't make other colors appear. His second experiment, however, was more successful. Newton found that, though he couldn't take the rainbow colors apart, he could put them all together. When the rainbow colors came together, they made a single beam of white light.

Newton realized that the colors were not in the prism, they were in the sunlight, somehow being revealed by the prism. Newton's experiments had hit upon the secret of light and color: Light is color, and color is light. Ours is a sun of many colors, and these colors color everything we see.

Here's an easy way for your students to see that there are colors in the sun's light.

You'll need a small hand mirror, a shallow pan filled with about 2" of water, and a white wall or board for a screen. Hold the mirror so that it is tilted facing the sun at about a 45-degree angle. You may have to play with the angle of the mirror a bit, but when you get it just right, a rainbow will reflect from the part of the mirror submerged in the water. If you've stirred up the water, wait for it to settle to see the best rainbow.

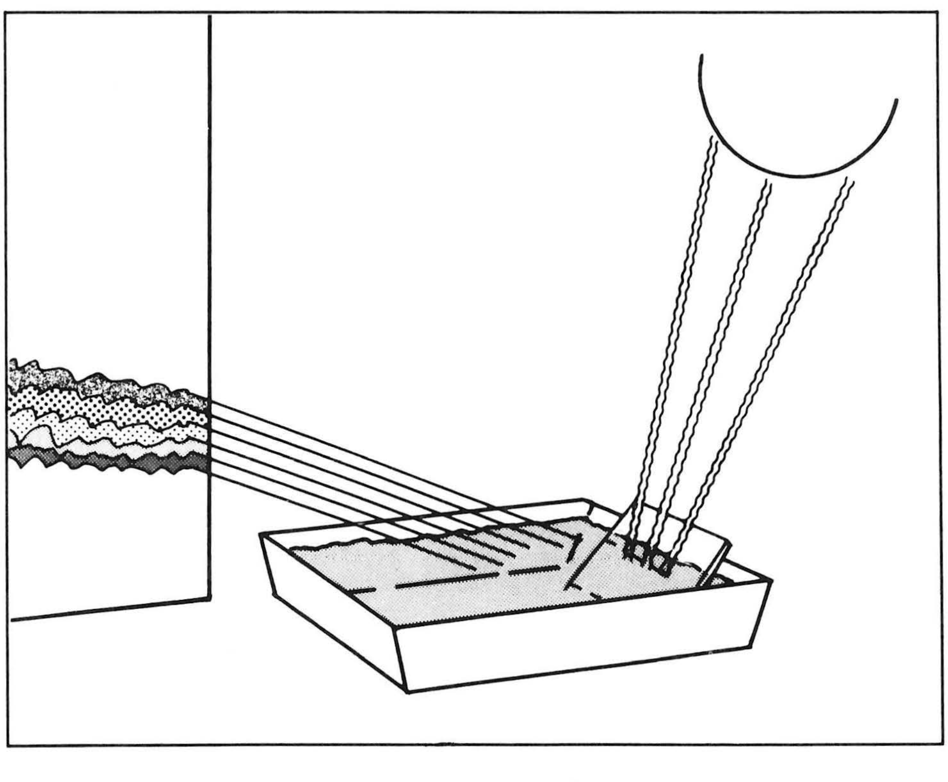

Newton divided the progression of hues he saw into seven different colors. He named the rainbow colors red, orange, yellow, green, blue, indigo and violet. We still use the names Newton gave the rainbow colors, though indigo, which appears just at the division between blue and violet, is not always considered a separate color.

About two hundred years after Newton's colorful explorations, another scientist, James Clerk Maxwell, discovered that the colors we see represent just a tiny portion of all the energy emitted by the sun. The sun spews out a whole range of energy in the form of intertwining waves of electricity and magnetism. These waves make up a continuous scale of changing frequencies, from long lazy radio waves at the lowest end, to short energetic X-rays at the highest end. Our eyes are "tuned" to respond only to the small portion of the sun's energy that we call light.

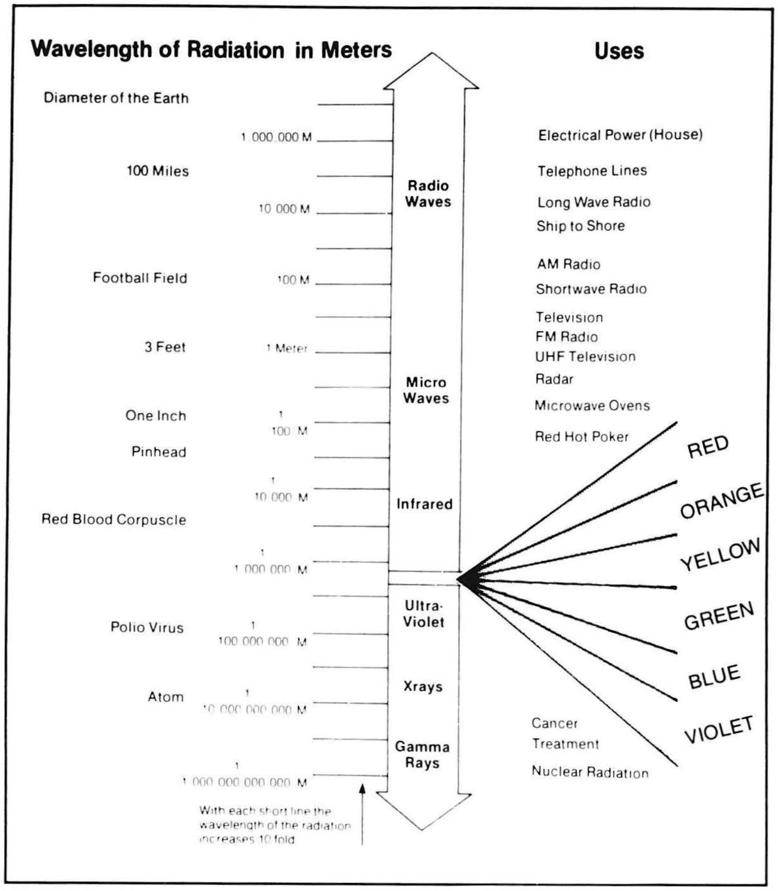

Every color that we see represents a slightly different wavelength of the sun's energy. Red has the longest wavelength (the distance measured from the crest of one wave to the crest of the next), and violet has the shortest wavelength. Imagine a rope tied to a door knob. If you take the free end of the rope and wiggle it quickly up and down you'll see lots of closely spaced waves traveling along the length of the rope. Wiggle the rope more slowly and you'll see fewer, larger waves, with more space between them. That's essentially the difference between violet light waves at one end of the spectrum and red light waves at the other. Violet light waves are more closely spaced than red light waves.

Since each color has a slightly different wavelength, it is possible to manipulate light so that each color behaves slightly differently. When you put light in a situation that forces each wavelength to react in a different way, then the light can't stick together. It separates into the rainbow colors of the spectrum.

In the following pages, we will explore five ways in which you and your students can see—and make—rainbow colors from sunlight.

REFRACTION

Light travels through air at a speed of 186,000 miles per second. But when light encounters a transparent material denser than air—glass, water, clear plastic, etc.—the light is absorbed by that material and then re-emitted. This process interrupts the flow of light, slows it down, and bends it, sending it off in a new direction. The bending of light is called *refraction.*

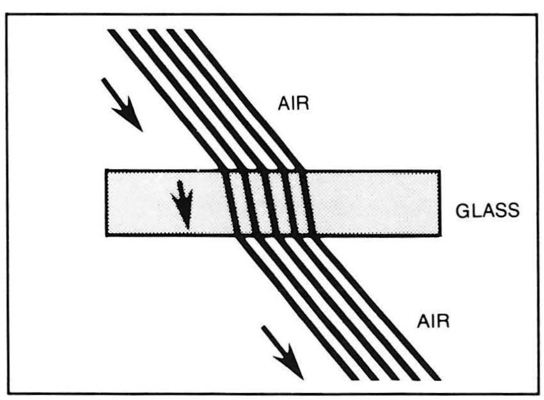

To understand why light bends when it slows down, think of a two-wheeled cart rolling down a smooth paved road. At the bottom of the road is a muddy field. If both wheels hit the mud at the same time, the cart will slow down, but both wheels will still be heading in the same direction. If the cart hits the mud at an angle, however, and one wheel slows down before the other, the second wheel will pivot around the mud-mired wheel and the cart will head off in a new direction.

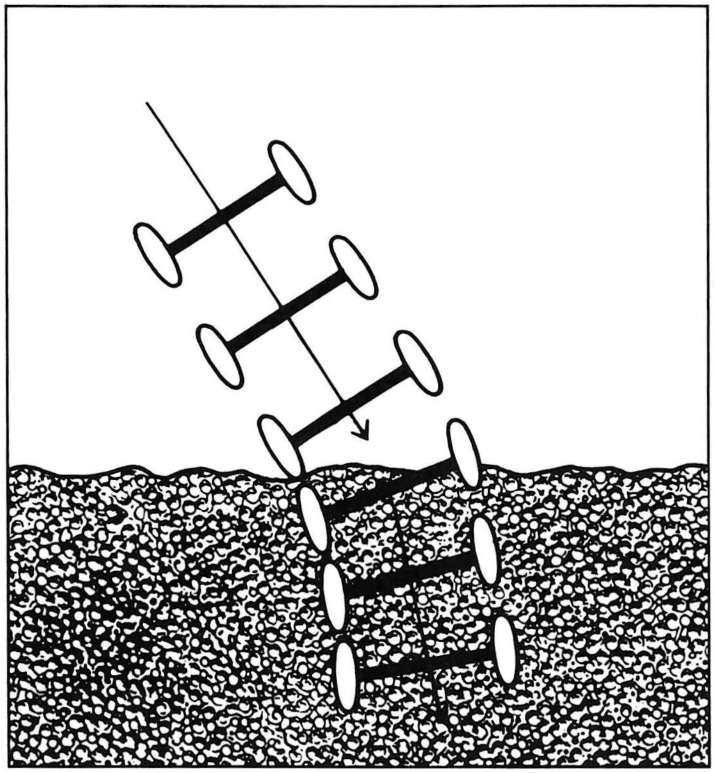

Like the wheels of the imaginary cart, light that hits a transparent material can enter either straight-on or at an angle. If the light enters straight-on, it slows down a bit, like the cart slows in the mud of the field, but doesn't change direction. But if the light hits at an angle, it bends, and things really start happening. As the light bends, each wavelength begins to behave differently. The red light waves bend less than the orange; the yellow light waves bend less than the green. The violet light waves bend the most. As sunlight bends through a prism, for instance, it emerges in a slightly different place, creating the familiar spray of rainbow colors.

If prisms are available, let your students try to make rainbows by holding a prism up to the sunlight. Many toy stores and science museum stores, including the Exploratorium Store, have different kinds of prisms available.

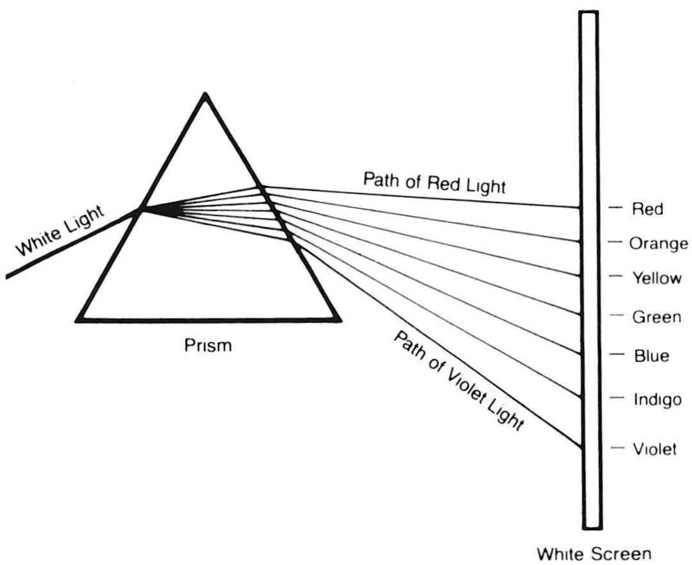

When you make a rainbow with a prism, you have to hold the prism in just the right place to make the rainbow appear. If the light isn't bent enough as it goes through the prism, the colors don't separate enough for you to be able to see them. The steeper the angle of the light entering the prism, the more the light will bend.

The wedge of a prism, the crystal bobs of a chandelier, or the intricate cut of a sparkling diamond all make perfect surfaces for bending light. All the facets and angles and edges of these objects make the light break up into fans of shimmering rainbows.

Ask your students to gather as many different things as they can think of that might make good rainbow-makers: hanging crystals, crystal earrings, cut-glass dishes, rhinestones, etc. Put the objects in the sunlight or another bright light. Notice how the light has to hit each object to make the best rainbow appear.

Light also bends and separates when it hits raindrops in the sky. That's how you see a rainbow. Notice that whenever you see a rainbow, light from the sun is behind you and the rainbow is in front of you.

Your students can make their own rainbows:

Run water through a garden hose and put your finger over the nozzle so that the water sprays out in a fine mist. Stand so that your back is to the sun and the water is in front of you. You'll have to fiddle with the position a bit to see the colors, but when you get the angle just right, you will be able to see a bow-shaped rainbow, just like the ones you see in the sky after a rain shower. Look for a faint second rainbow that often appears below the bright rainbow. Notice that the colors of the second rainbow are in the opposite order: reds on the bottom, violets on the top. This activity works best when the sun is not directly above you, so try it either in the morning or the afternoon, not at high noon.

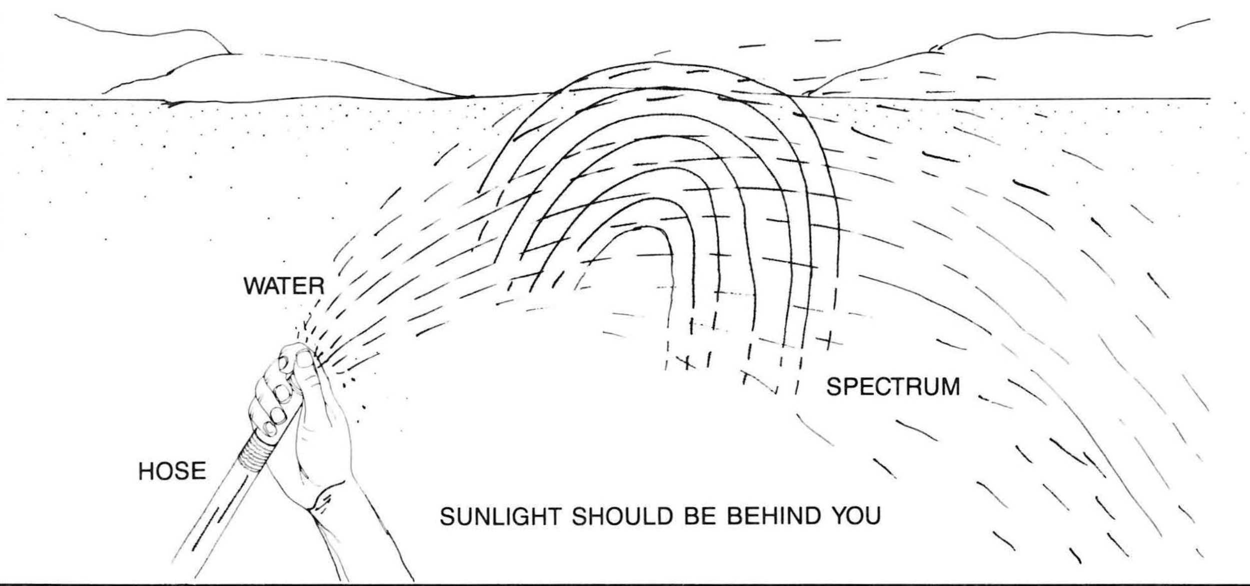

DIFFRACTION

Another way light can separate into colors is by *diffraction*. When light hits an edge or corner of an object, the light bends around the edge or corner and separates into rainbow colors. The edges have to be pretty small to see this effect. The tiny grooves of a record provide a good surface for watching the effects of diffraction.

Hold a record in front of you and let the sun shine on it. Look down onto the surface of the record and gently tilt it back and forth. You'll be able to see bands of rainbows shimmering from the narrow grooves that line the top of the disk. The rainbows are made by a complex combination of many light waves bouncing from the tops of the grooves.

If you squint at a bright point of light (other than the sun) you can see rainbows as the light diffracts around the thin fringe of your eyelashes. Squint at street lights at night to see if you can see colors. Try looking through a feather or a piece of silkscreen to get the same effect.

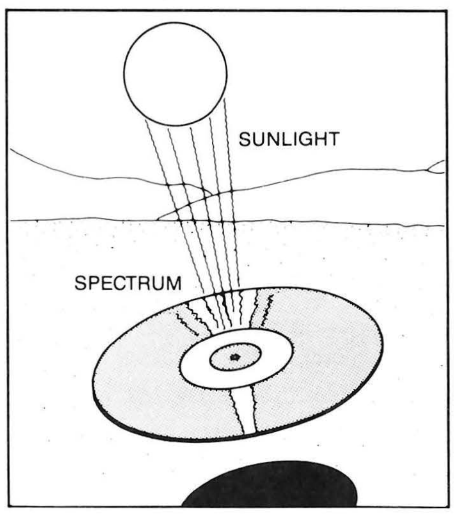

4

A diffraction grating is a material specially prepared to separate light by diffraction. It is usually a piece of glass or clear plastic with thousands of tiny scratches etched into its surface. Inexpensive diffraction gratings are available at many science museum stores (including The Exploratorium Store), or they can be ordered from the Edmund Scientific Company catalog.

Astronomers put diffraction gratings in front of their telescopes to separate the light that reaches us from distant stars. The gases in our sun create all the colors we see. But if another star is made up of a different combination of gases, its spectrum will be different. A star made up of neon, for example, will have a rainbow of only red, orange, yellow and green. By analyzing the spectrum of a particular star, we can tell what gases it is made of. This is called *spectral analysis.*

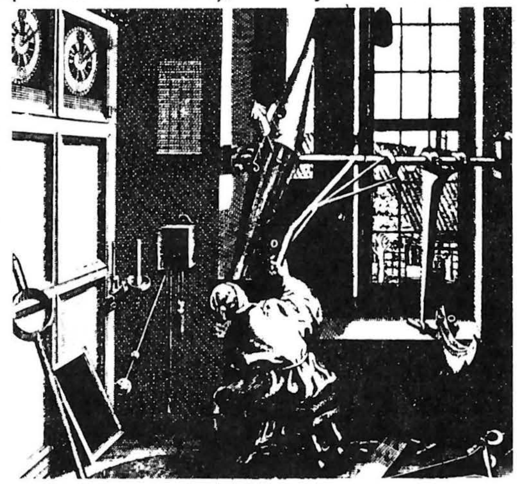

INTERFERENCE

Interference is another way the colors of white light become separated. Interference colors show themselves when light reflects off the front and back surfaces of very thin films, like oil slicks, and bubbles.

Light waves entering a thin film reflect off both the front and back surfaces of the film. Waves reflecting from the front surface and waves reflecting from the back surface meet on their way back to your eyes. The waves can either meet so that they join and reinforce each other (constructive interference), or they can meet so that they cancel each other out (destructive interference). If the red light waves cancel each other out, for instance, then you will only be able to see the remaining green/blue/violet part of the spectrum, and the film will appear greenish-blue. The thickness of the film determines just how the light waves meet.

This same type of interference also happens when water waves meet. When the crest of one wave (the highest part) meets the crest of another wave, they can add their energy together to make one big wave. If, however, the crest of one wave meets the trough (the lowest part) of another, the two waves may actually cancel each other out.

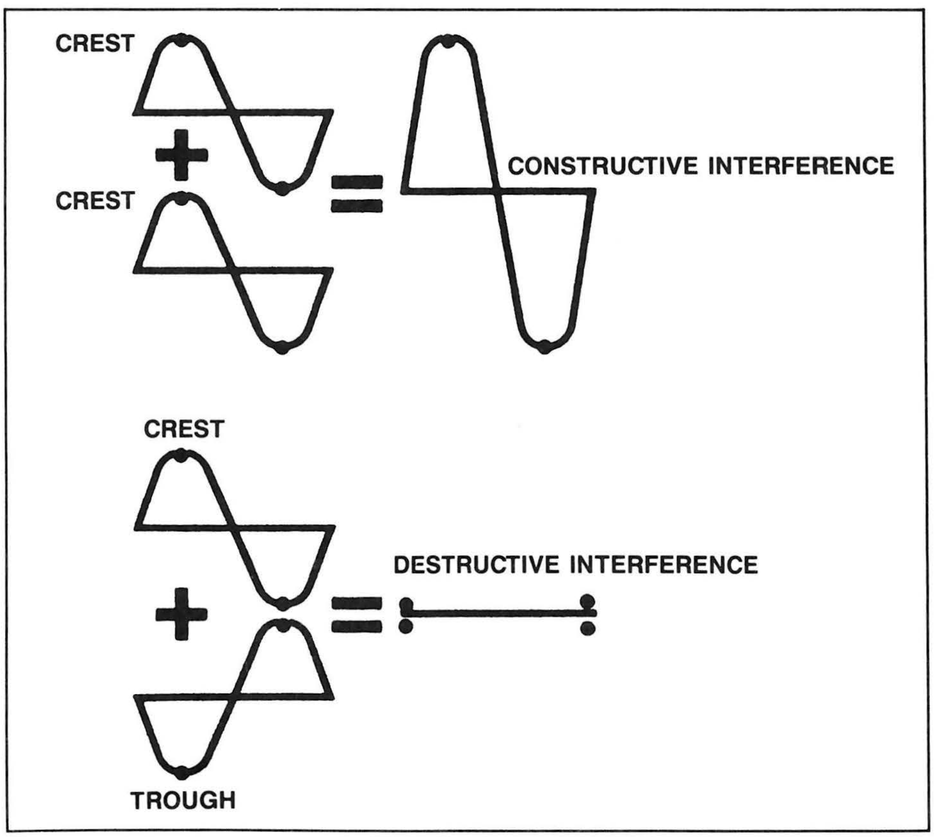

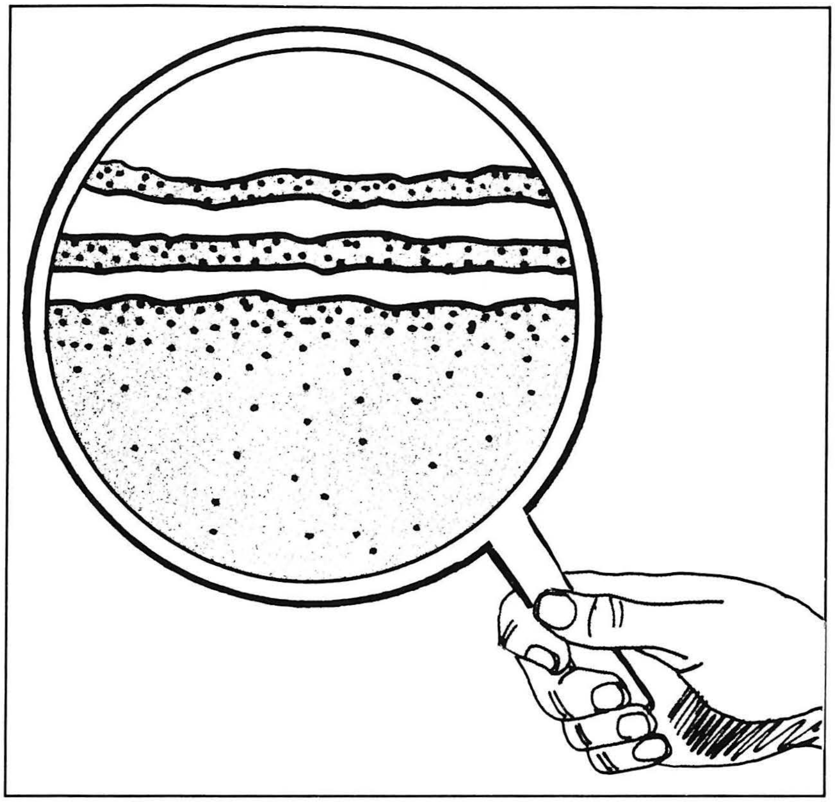

Soap bubbles are great for watching the interference of light colors. An easy-to-make bubble solution is:

1 gallon of water
2/3 cup of New Dawn or Joy dish-washing liquid
1 tablespoon of glycerine (optional, available at drug stores; glycerine increases the durability of the bubbles)

Combine these ingredients in a shallow tub. The solution works best if allowed to age a day or two.

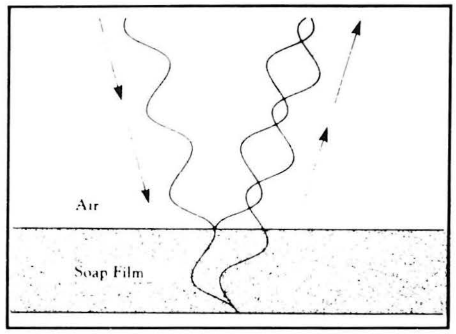

Any kind of ring or tube will work for blowing or waving bubbles. The colors in the soap film are most striking when viewed against a black background, with both you and the light in front of the soap film. As the thickness of the soap film changes, the colors in the bubble change. New colors appear as other colors are canceled out.

SCATTERING

(or—Why is the sky blue?)

Some of the colors of light get separated when sunlight hits the earth's atmosphere. Our atmosphere is made up of tiny particles, mostly nitrogen and oxygen molecules. When the sunlight comes into contact with these particles, the longer wavelengths remain largely unaffected, and pass right though. The shorter wavelengths of light, however, especially the blues and violets, are absorbed by the particles and then re-emitted into the air, scattering randomly about. As these blues and violets scatter into the air, they form the umbrella of blue light that colors our sky.

In the early morning and in the late evening, light from the sun hits the earth at a greater angle, and so must pass through more of the atmosphere than it does during the day. With more atmosphere to pass through, more of the blue light is scattered out, leaving the reds, yellows and oranges for you to see in spectacular sunrises and sunsets.

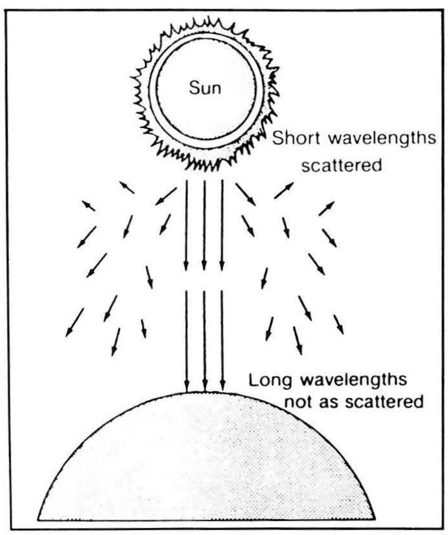

ABSORPTION

Just as water can be absorbed by a paper towel, light can be absorbed by many things. Most of the objects we see every day contain pigments, chemicals that absorb or reflect the colors of light. Chlorophyll is the pigment that makes plants look green, melanin is the pigment that gives people's skin color. There are pigments in the dyes we use to color our clothes.

The dye in a red shirt, for example, will absorb the violet, indigo, blue and green colors of white light, and most of the yellow and orange. The red light, and perhaps a bit of yellow and orange, will be the only colors reflected back to your eyes, and so the shirt will look red. A black shirt will absorb almost all of the light that hits it: none of the colors will be reflected back for your eye to see. A white shirt, on the other hand, will hold on to practically none of the white light. All the colors will be reflected back to your eyes, and the shirt will look white.

As the colors of the light are absorbed by the pigments in materials, their energy is transformed from light to heat. That's why it's not a good idea to wear black on a hot day. Most of the light from the sun is absorbed by the black pigments, and then transformed into heat. It's much cooler to wear white.

You and your students can do this simple experiment on a sunny day to feel the change from light to heat as sunlight is absorbed by different colors of construction paper.

Place a sheet of white construction paper and a sheet of black construction paper next to each other in full sunlight. Notice that when you first place them on the ground, both the black and the white paper feel about the same temperature. Leave them on the ground for 30 seconds, then place a hand on each one to compare how warm they are getting. Try again in another 30 seconds. It will be easy to feel the difference between the white and black paper as the light is absorbed and turned into heat. The black paper will feel much warmer.

Try comparing the absorption of different colors of paper. You can often feel a slight difference. You may be able to feel, for instance, that red or blue paper is slightly warmer than white, but not as warm as black. You might notice that blue paper is slightly warmer than red. This is because the red light that the blue paper absorbs creates more heat than the blue light that the red paper absorbs!

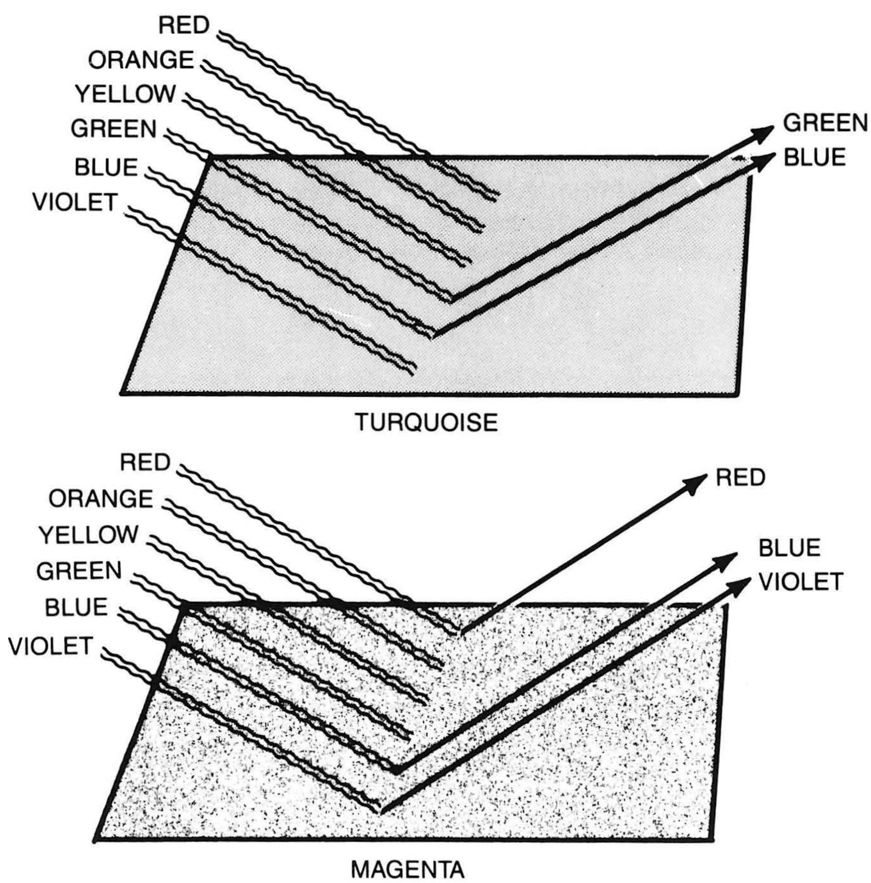

The infinite subtleties and differences in color in all the things we see occur because most things do not reflect just one color to our eyes. Rather, combinations of colors are reflected that blend together to make many different colors of light.

A piece of paper that looks turquoise, for example, is reflecting a combination of blue and green light. A piece of paper that looks magenta is reflecting some red, some blue, and some violet light. All the other colors are being absorbed.

Green plants use light in other ways. A green plant looks green because it reflects green light to your eyes. The red and blue parts of the spectrum are absorbed by the plant and used as energy for photosynthesis. If you put a green plant under a green light, it will not grow very well. The plant needs the other parts of the spectrum to make its food and to grow.

THERE'S MORE TO LIGHT THAN SUNSHINE

So far, we've been talking about the colors in sunlight, but we don't always look at things out in the clear light of day. Colors don't look the same under artificial light, such as fluorescent or incandescent light. Fluorescent lights usually have more blue light in them than red. Incandescent lights have more red, and are closer to the mixture of color that sunlight has. A red object will look darker under an incandescent light, or in the full light of the sun, than under a fluorescent light.

You and your students can see how the perception of color changes when you change the kind of light illuminating what you see.

Light up your classroom with yellow lights. Yellow lights can be found in most hardware stores (sometimes called "bug lights"). Yellow bug lights have only yellow, red, and some green light in them. When you look at a blue object under a yellow light, it will look very dark. Its pigment absorbs all of the yellow light, and there's no blue light to reflect back for your eyes to see. Yellow objects, on the other hand, will look very bright since most of the color will be reflected back to your eyes. Try illuminating the classroom with different-colored light bulbs. Blue, green, and red light bulbs are often available.

Look at these different colors of light through soap bubbles and prisms. Notice that their spectra do not have all the colors of white light. Look at soap film under yellow light and it will not show any blue.

There are colored lights around us that we never even think about. Many bridges, including the Golden Gate Bridge, are illuminated with yellow lights at night. The meat counter at the grocery store is often illuminated with a special light that enhances reds. Take a juicy-red roast out of the special light into the overhead lights of the grocery store and you'll notice the difference in color.

"Light colors everything: our possessions, our surroundings, our thoughts, our feelings. Both people and political opinions come in various colors. Some people are more colorful than others. . . A story without color is a story without life. What's colorless is dull, boring. In short, the colors of light bring both vibrancy and variety—to both our universe and to our daily lives."

—K. C. Cole
Facets of Light

RELATED EXHIBITS (*denotes exhibits on this Pathway)

Glass Bead Rainbow
Rainbow Encounters
*Sun Painting
*Color Removal
Color Sum
Soap Hoops
Distilled Light

Light Island
Solar Signature
Aurora
*Bridge Light
Iron Sparks
Soap Film Painting
*Spectra

Rainbow Edges in Your Eye
Rainbow Edges in a Lens
*Colored Shadows
Prism Tree
*Soap Bubbles
Color Table
Orange Shadows

Laser Demonstration
*Diffraction
Glow Wheel
Blue Sky
Fluorescent Tube

PUBLICATIONS

Available in the Exploratorium Store

The Nature of Light and Color in the Open Air by M. Minnaert. Dover Publications, Inc., New York, 1954.

Optics by Sir Isaac Newton. Dover Publications, Inc., New York.

The Art and Science of Color by H. Hellman. McGraw-Hill Publishing Co., New York, 1967.

Conceptual Physics by P. Hewitt. Little, Brown & Co., Boston, 1974.

Light, Sight & Color. Science Universe Series, Arco Publications, New York, 1974.

Light and Color by C. Rainwater. Golden Press, Inc., New York, 1977.

Available Elsewhere

Bubbles by B. Zubrowski. Little, Brown & Co., Boston, 1973. (Currently out of print. May be available in used-book stores.)

Light and Vision. Life Science Library, Time-Life Books, Inc., New York, 1965. (Out of print. May be available in used-book stores.)

Optics Unit, Elementary Science Series, Teacher's Guide and Kit. McGraw-Hill Publishing Co., New York, 1971.

MATERIALS—Available in the Exploratorium Store

Prisms: $1.00 and up — Diffraction Gratings: $.35 and up — Diffraction Grating Glasses: $1.15 each

We're interested in your comments and ideas.
Please write to Pathways, c/o Sally Duensing, 3601 Lyon Street, San Francisco, CA 94123.

Exploratorium Pathways are funded by a grant from the David and Lucile Packard Foundation.

exploratorium pathways

The Colors of Light

EXHIBIT GUIDE

Sunlight is made up of all the colors of the rainbow. In fact, most of the light you see is made up of many colors mixed together. The exhibits on this Pathway let you separate the colors of light with lenses, prisms, even soap bubbles. You can play with giant ribbons of color separated from sunlight, and discover the hidden colors in glowing gases. If you need help with an exhibit, ask an orange-jacketed Explainer for assistance.

DIFFRACTION

Look at the bright light and squint your eyes. Notice the pattern of the light. Look through all the paddles at the bright light ahead of you. Look for a rainbow each time.

Draw the light pattern you see when you look through the silkscreen.

COLOR REMOVAL

Notice the rainbow on the screen. Check the colors that you see:

☐ red ☐ orange ☐ yellow ☐ green ☐ blue ☐ violet

Look through the yellow filter at the rainbow. Now what colors do you see?

☐ red ☐ orange ☐ yellow ☐ green ☐ blue ☐ violet

Look at the rainbow through a pink filter. What colors do you see?

☐ red ☐ orange ☐ yellow ☐ green ☐ blue ☐ violet

On the main floor

SUN PAINTING

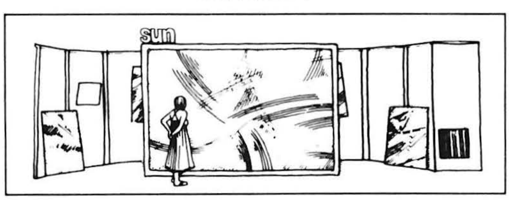

(This exhibit only works when the sun is shining.) What are some of the colors you see on the big screen?

____

____

Look up at the ceiling to find where the sun comes into the Exploratorium. Try to follow the path of light. Can you find the prisms?

____

Stand about ten feet in front of the prisms. Do you see a rainbow on your legs?

____

SPECTRA

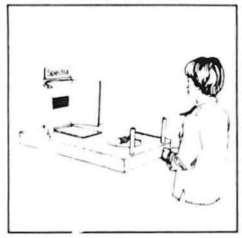

Turn the dial to *Neon*. Look at the shiny plastic on the table. What colors do you see?

____

____

____

Turn the dial to the other kinds of gases. Look at the colors in each gas. Which gas is your favorite?

____

SOAP BUBBLES

Push the button once to dip the wires into the soap tray. Wait for the wires to come up again. Watch the bands of color form on the soap. How many different colors do you see? __________

BRIDGE LIGHT

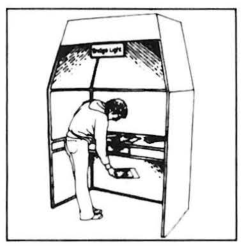

Look at one of the pictures under the yellow light. What colors do you see?

____

____

____

Look at the same picture *under* the table in the white light. Do you see more colors?

____

On the main floor

COLORED SHADOWS

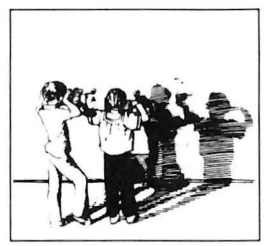

Colored light can make colored shadows. Do a dance in front of the wall. How many different colors can you make with your shadow?

____

OTHER COLOR EXHIBITS

On the mezzanine...

Light Island—Here you can bounce, bend, and mix light to make colors.

Rainbow Encounters—Watch two rainbows collide.

Color Table—Look through a red filter to see a secret message.

On the main floor...

Aurora (near *Sun Painting*)—Overlap, mix and make new colors.

Soap Film Painting and **Bubble Hoops** (South end of the museum)—Watch the colors appear and disappear in these giant soap bubbles.

Most of the exhibits on this Pathway are on the mezzanine, in the Color section of the museum.

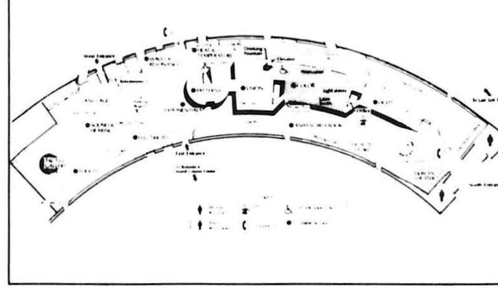

Table of Contents for Cookbooks I, II, III

"...a delight to read...I highly recommend the *Exploratorium Cookbooks*."

—Gerald Wheeler in *Physics Teacher*

"*Exploratorium Cookbooks*—the most used do-it-yourself manuals in the science center world."

—Bonnie Van Dorn, Executive Director
Association of Science-Technology Centers (ASTC)

"...whip up some of these dishes, the very same exhibits that crowd the big floor of the Exploratorium....These recipes work, and the pleasure and nutrition of the results repays the cooks."

—Philip Morrison, MIT Physicist
and Phylis Morrison, noted educator,
authors of the PBS series, *The Ring of Truth*

"OK—so there's no such thing as a free lunch. But the *Exploratorium Cookbooks* are amazingly free with original ideas and designs for experiments—used all over the world."

—Richard L. Gregory
Founder of the Bristol Exploratory

ISBN 0-943451-38-8
59500>
EAN
9 780943 451381